I.CH MOTION CO., LTD
MOTION WORLD

I.CH PM STEPPER MOTOR + GEAR



I.CH Motor PM Stepper motor with inside gears

Structure and Characteristic of DC motor

PM series motor mainly used in printers, copycat, fax machine and some computer, medical care, lighting, industry automatic related equipment.

Product Number Code For PM Stepper Motor + Gears

P 24 4 - XXX X

- P — PM STEPPER MOTOR
- 24 — Dimension of Motor 24-→ ¢24mm
- 4 — PM Stepper motor + gear
- XXX — Torque 050 → 0.50kg.cm = 500g.cm
- X — Leads no.

PM STEPPER MOTOR + GEAR P244 (24mm)

Application
Mainly used in Air Conditioner Louver, Smal Cooling / Heating Fan, wind guiding board of fission air conditioner in house, wind heating board ect.

Complementary Products:

- Output Shaft
- Assembling Size
- Lead Wires No.

Picture



Specification

MODEL	No. of phase	Step Angle	Voltage	Speed Ratio	Resistance	Starting Frequency	Pulling Torque (100P.P.S)	Detent Torque	Wiring	Figure
		°	V		Ω	P.P.S	g.cm	g.cm		
P244-0505A	4	5.625	12	1:64	120	≥500	≥500	≥350	Alternative	
P244-0505B	4	5.625	12	1:64	200	≥500	≥500	≥400		
P244-0305	4	5.625	12	1:64	300	≥500	≥300	≥300		
P244-0125	4	5.625	12	1:25	300	≥500	≥120	≥150		
P244-0254	2	11.25	8	1:16	50	≥600	≥250	≥150		

Mechanical Dimensions

Figure 1

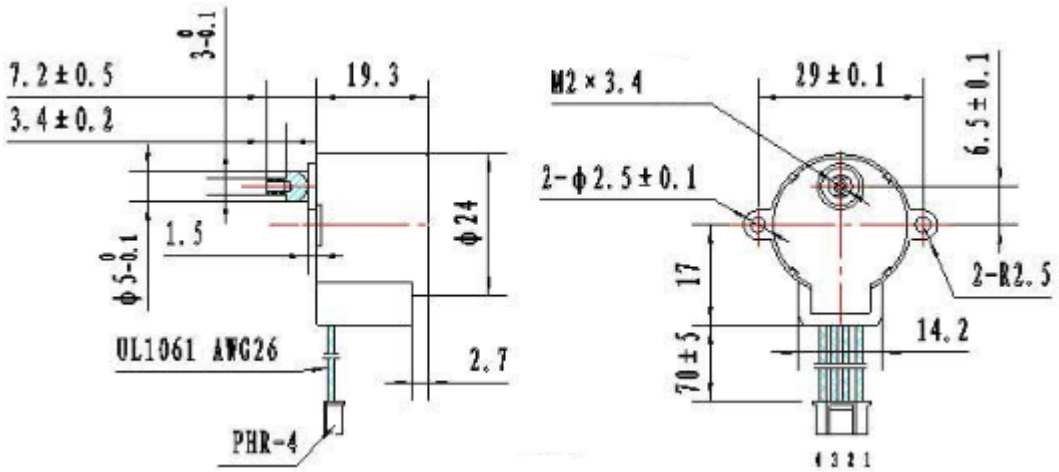

Figure 2

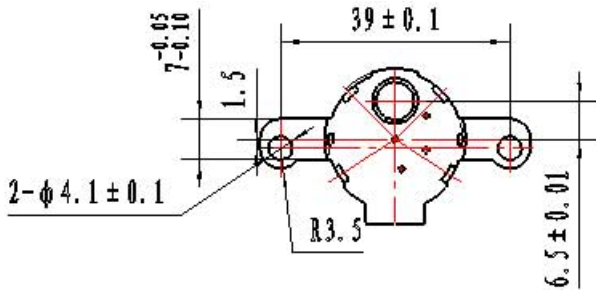

Figure 3

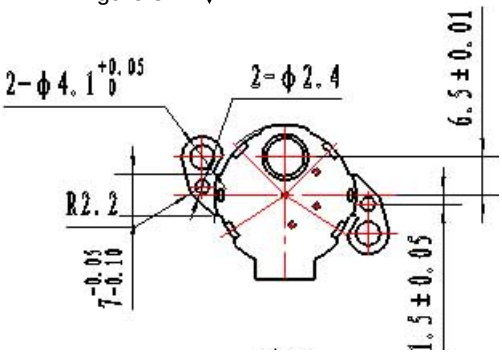

Figure 4

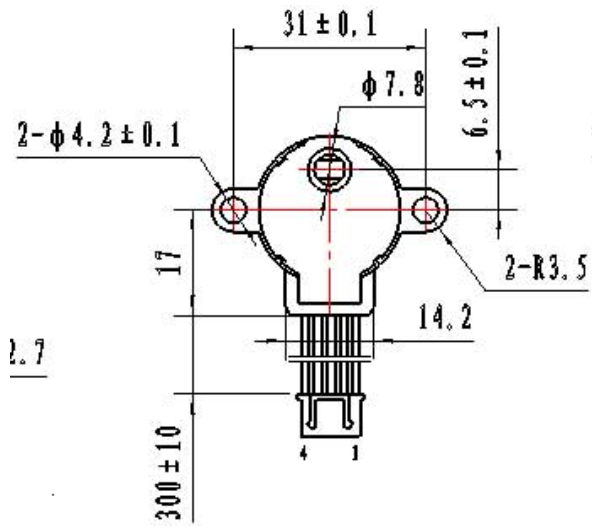

Figure 5

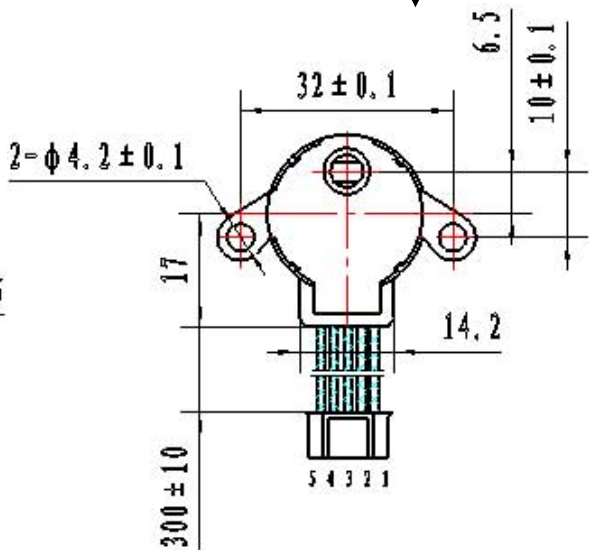

Figure 6

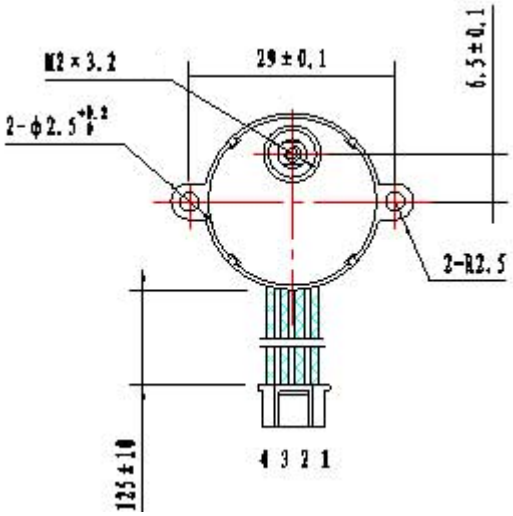

Figure 7

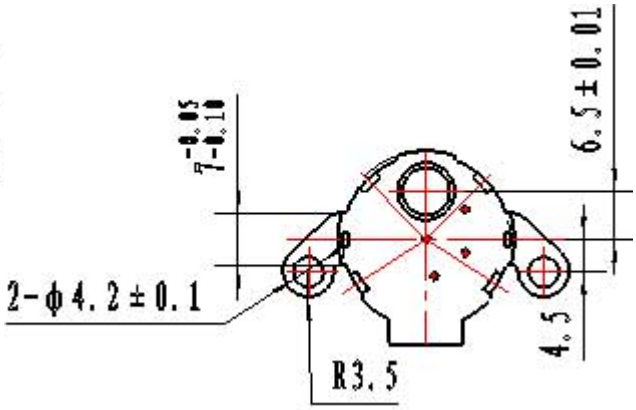

Figure 8

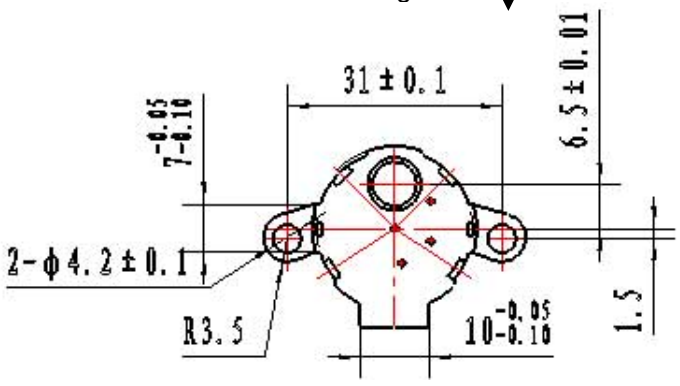

Standard Leadwire Configuration

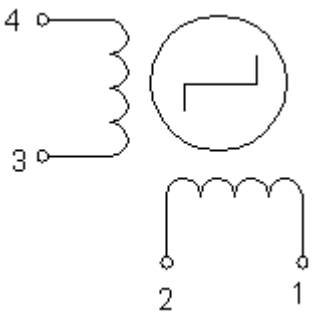

2-2 excitation

Pin No.	Wire Color	Step 1	2	3	4
4	ORG	+			+
2	YEL	+	+		
3	PINK		+	+	
1	ORC			+	+

→ CCW direction (from shaft end)

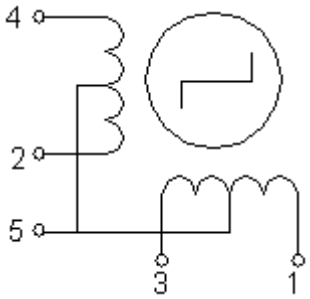

4-1-2 excitation

Pin No.	Wire Color	Step 1	2	3	4	5	6	7	8
5	RED	+	+	+	+	+	+	+	+
4	ORG	-	-						-
3	YEL		-	-	-				
2	PIN				-	-	-		
1	BLU						-	-	-

→ CCW direction (from shaft end)

PM STEPPER MOTOR + GEAR P284 (28mm)

Application

Mainly used in printer, scanner, stage light etc.

Picture

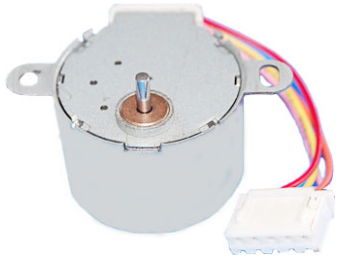

Complementary Products:

- Output Shaft
- Assembling Size
- Lead Wire or Terminal

Specification

MODEL	No.of phase	Step Angle	Voltage	Speed Ratio	Resistance	Starting Frequency	Pulling Torque (100P.P.S)	Detent Torque	Wiring	Figure
		°	V		Ω	P.P.S	g.cm	g.cm		
P284-0305	4	5.625	12	1:64	300	≥550	≥300	≥300	Alternative	

Mechanical Dimensions

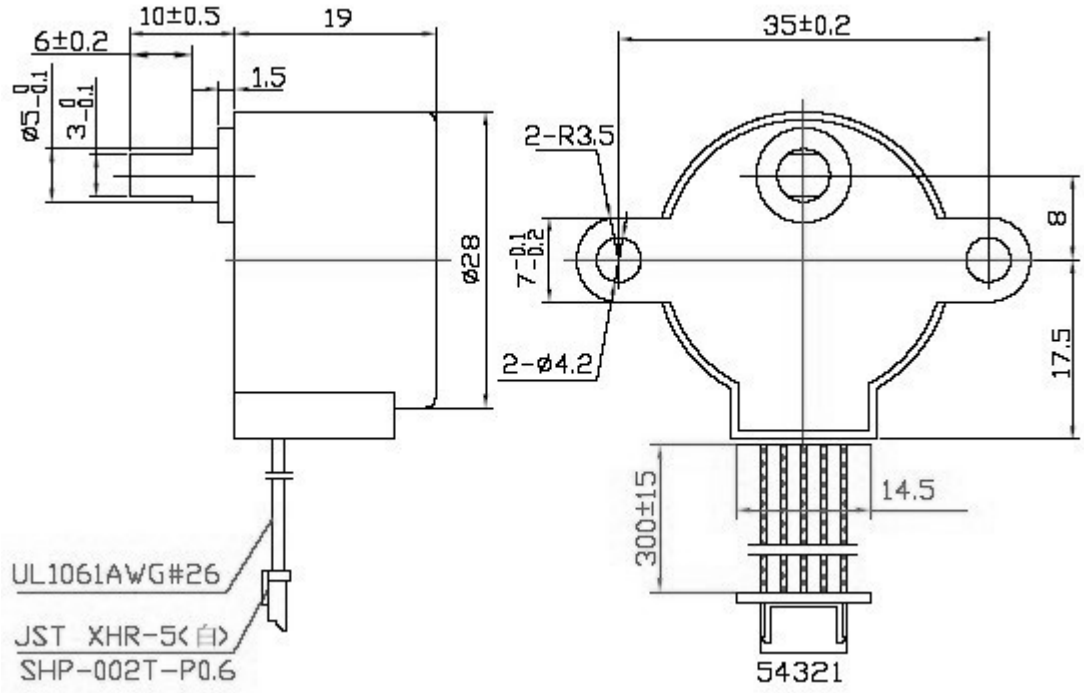

Standard Leadwire Configuration

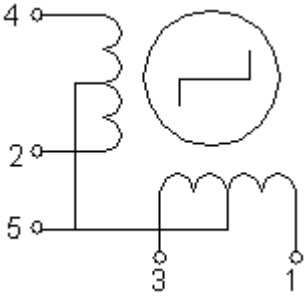

4-1-2 excitation

Pin No.	Wire Color	Step 1	2	3	4	5	6	7	8
5	RED	+	+	+	+	+	+	+	+
4	ORG	-	-						-
3	YEL		-	-	-				
2	PIN				-	-	-		
1	BLU						-	-	-

→ CCW direction (from shaft end)

PM STEPPER MOTOR + GEAR P304 (30mm)

Application

Mainly used in printer, scanner, stage light etc.

Picture

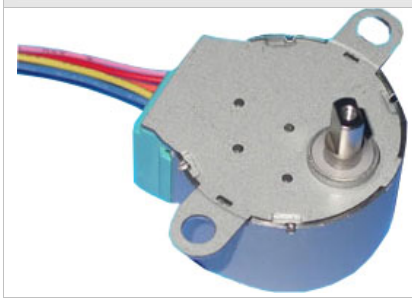

Complementary Products:

- Output Shaft
- Assembling Size
- Lead Wire or Terminal

Specification

MODEL	No.of phase	Step Angle	Voltage	Speed Ratio	Resistance	Starting Frequency	Pulling Torque (100P.P.S)	Detent Torque	Wiring	Figure
		°	V		Ω	P.P.S	g.cm	g.cm		
P304-1505	4	7.5	12	1:85.25	70	≥600	≥1500	≥800	Alternative	

Mechanical Dimensions

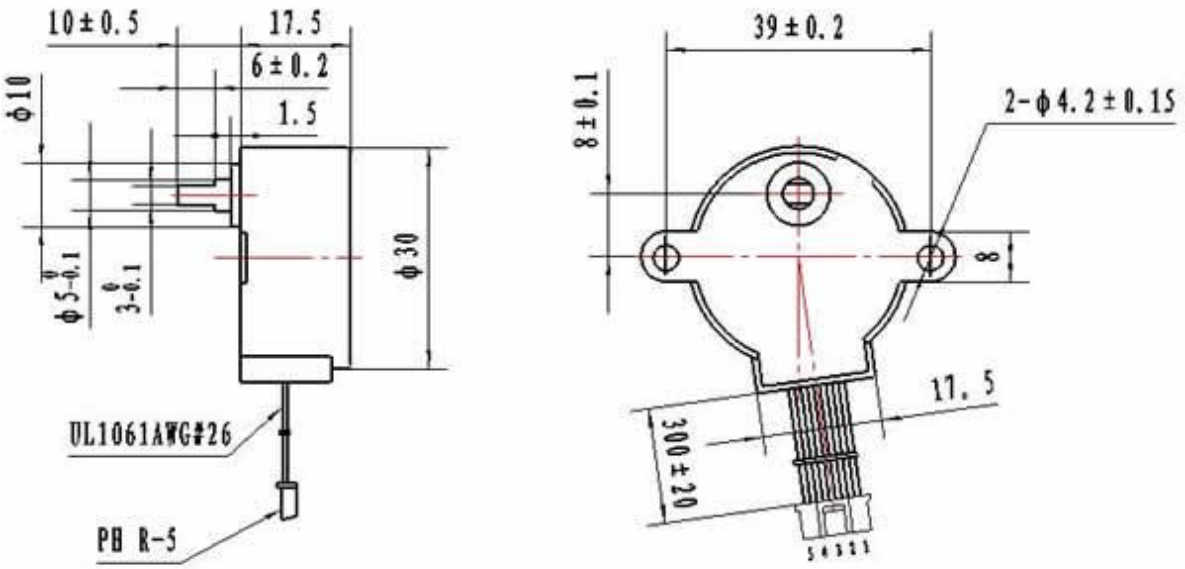

Standard Leadwire Configuration

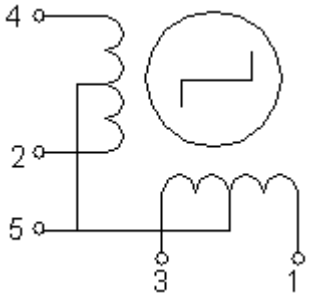

4-1-2 excitation

Pin No.	Wire Color	Step 1	2	3	4	5	6	7	8
5	RED	+	+	+	+	+	+	+	+
4	ORG	-	-						-
3	YEL		-	-	-				
2	PIN				-	-	-		
1	BLU						-	-	-

→ CCW direction (from shaft end)

PM STEPPER MOTOR + GEAR P354 (35mm)

Picture

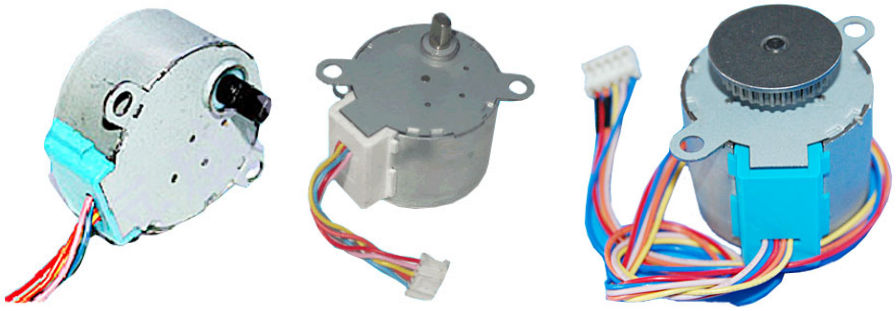

Application

Mainly used in printer, scanner, stage light etc.

Complementary Products:

- Output Shaft
- Assembling Size
- Lead Wire or Terminal

Specification

MODEL	No.of phase	Step Angle	Voltage	Speed Ratio	Resistance	Starting Frequency	Pulling Torque (100P.P.S)	Detent Torque	Wiring	Figure
		°	V		Ω	P.P.S	g.cm	g.cm		
P354-0805	4	7.5	12	1:8525	120	≥450	≥800		1	
P354-2605	4	5.625	12	1:80	120	≥600	≥2600		2	
P354-3205	4	3.75	12	1:42.5	60	700	≥3200	≥1600	3	
P354-2005	4	3.75	12	1:42.5	95	600	≥2000	≥1600	3	
P354-1805	4	3.75	12	1:42.5	120	600	≥1800	≥1600	3	

Mechanical Dimensions

Figure 1A

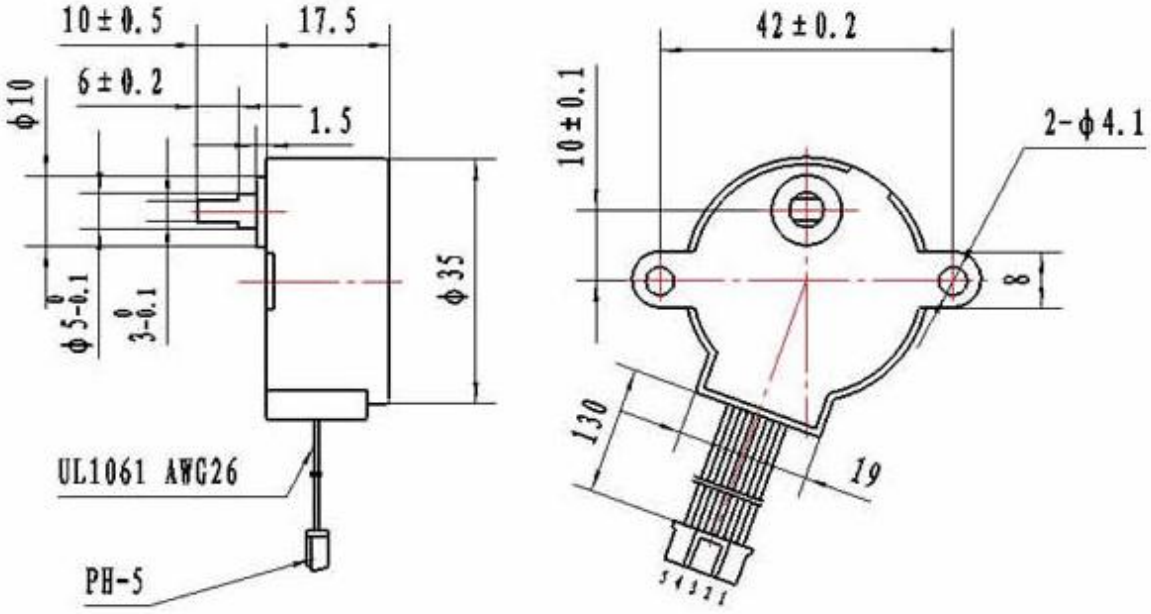

Mechanical Dimensions

Figure 1B

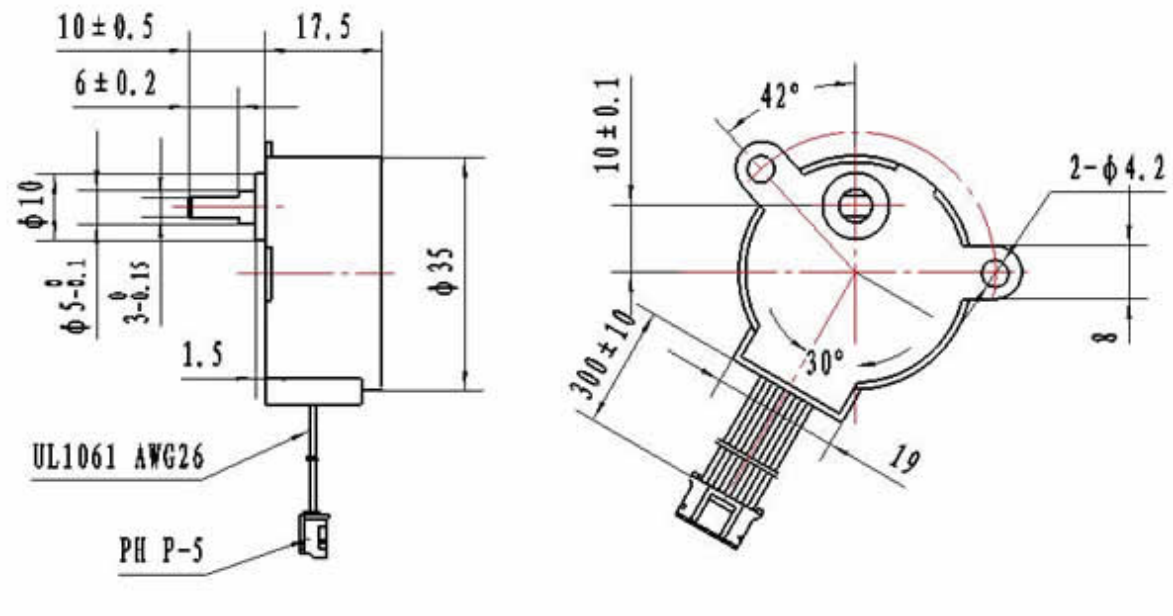

Figure 2

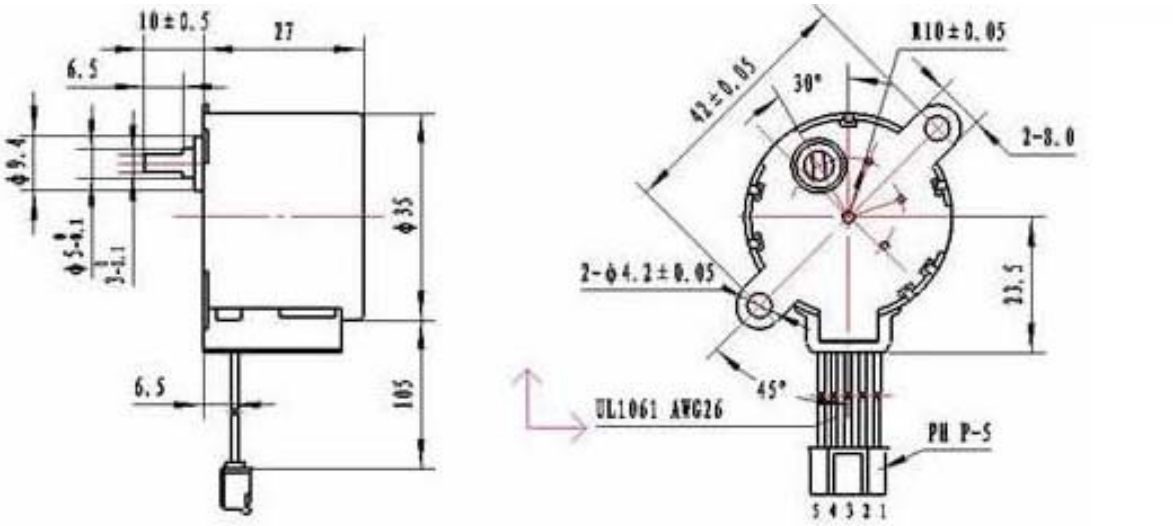

Mechanical Dimensions

Figure 3A

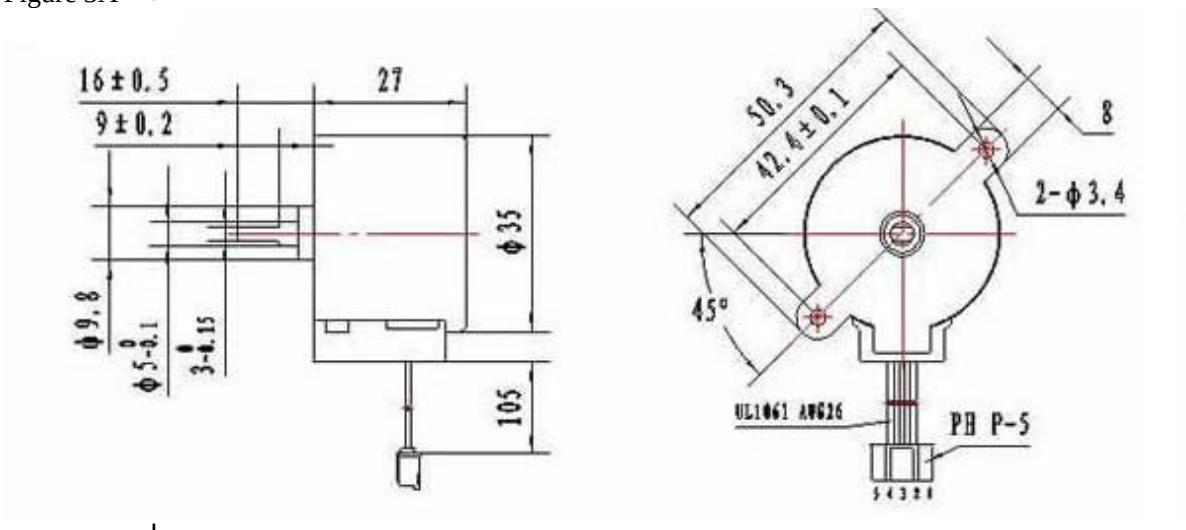

Figure 3B

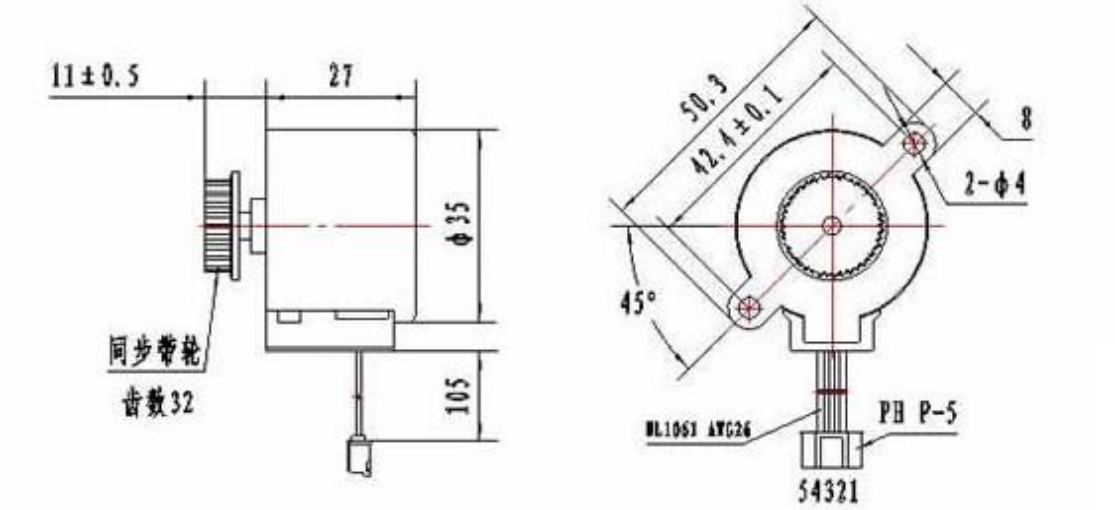

Standard Leadwire Configuration

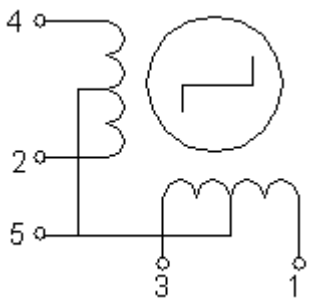

4-1-2 excitation

Pin No.	Wire Color	Step 1	2	3	4	5	6	7	8
5	RED	+	+	+	+	+	+	+	+
4	ORG	-	-						-
3	YEL		-	-	-				
2	PIN				-	-	-		
1	BLU						-	-	-

→ CCW direction (from shaft end)