I.CH MOTION CO., LTD
MOTION WORLD

I.CH AC SYNCHRONOUS MOTOR



I.CH Motor supply a complete range of AC Synchronous motor.
Structure and Characteristic of AC Synchronous Motor

Product Number Code For AC Synchronous Motor

S 50 1 xx xx

- S: SYNCHRONOUS MOTOR
- 50: Dia. Of motor
- 1: 1 : AC synchronous Motor; 2 : Oven Motor; 3: Reversible Motor; 4: Hysteresis
- xx: Torque; 12= 12kg.cm
- xx: Speed: 1.6 = 1.6rpm

AC Synchromotor D501 (Size 50mm)

Application
Household Electrical Appliances , Laminator, Auto Control Machine , Spotlight and etc.

Safety	
Insulation resistance	DC 500V 100MΩ
Insulation strength	AC1500V, 50Hz/min(220V motor)
Insulation class	E(105℃) / B(130℃)
Environment	Temp.-15℃~+40℃ / Humidity: <85
Certification	CE RoHS

Picture



Specification

Model	Output speed (rpm)	Output Torque (kg.cm / lb. in) S1 continuous	S2 15 minutes	S2 5 minutes	Voltage (V.AC)	Current (A)	Frequency (Hz)	Input Power (W)	Noise (dB)	Rotation
S501-25-1.6	1.6	25			24	<0.3	50/60Hz	4.5	<45	CW,CCW
S501-17-2.5	2.5	17			*********	**********				
S501-14-03	3	14	18		110	<0.065				CW/CCW (Free)
S501-11-04	4	11	13	15	*********	*********				
S501-07-06	6	7	9	10	220	<0.033				

Note: Above datas are from motors under 50Hz. If under 60Hz, Speed*1.2 , Torque/1.2
Other speed and torque needed, please contact our sale department

Mechanical Dimensions

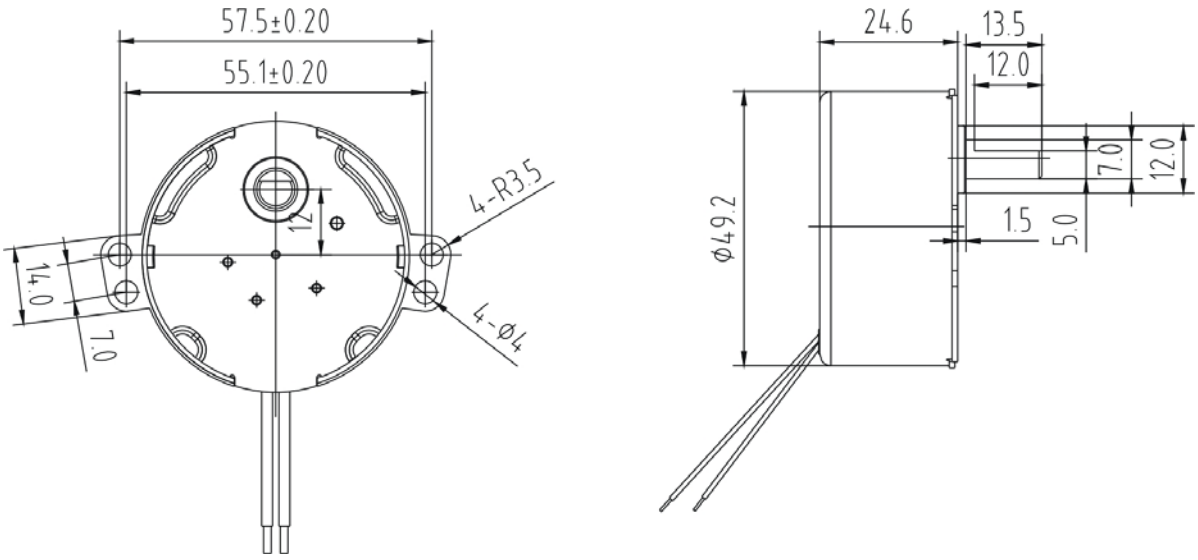

AC Synchromotor S601 (Size 60mm)

Application
Household Electrical Appliances , Laminator, Auto Control Machine , Spotlight and etc.

Safety	
Insulation resistance	DC 500V 100MΩ
Insulation strength	AC1500V, 50Hz/min(220V motor)
Insulation class	E(105℃) / B(130℃)
Environment	Temp.-10℃~+40℃ / Humidity: <85
Certification	CE RoHS CCC

Picture



Specification

Model	Output speed (rpm)	Output Torque (kg.cm / lb. in) S1 continuous	S2 15 minutes	S2 5 minutes	Voltage (V.AC)	Current (A)	Frequency (Hz)	Input Power (W)	Noise (dB)	Rotation
S601-12-4.6	4.6	12 / 10.44	14 / 12.18	16 / 13.92	24 ********* 110 ********* 220	<0.4 ********** <0.084 ********* <0.042	50/60Hz	<6	<40	CW,CCW CW/CCW (Free)
S601-05-10	10	5.5 / 4.82	6.5 / 5.66	7.5 / 6.53						
S601-04-15	15	3.5 / 3	4.3 / 3.74	5.0 / 4.35						
S601-03-20	20	2.8 / 2.43	3.2 / 2.78	3.7 / 3.22						
S601-02-30	30	2 / 1.74	2.2 / 1.91	2.5 / 2.18						
S601-01-50	50	1.2 / 1.04	1.3 / 1.13	1.5 / 1.31						
S601-01-60	60	1 / 0.87	1.1 / 0.96	1.2 / 1.04						
S601-01-90	90	0.6 / 0.52	0.7 / 0.6	08 / 0.7						

Note: Above datas are from motors under 50Hz. If under 60Hz, Speed*1.2 , Torque/1.2
Other speed and torque needed, please contact our sale department

Mechanical Dimensions

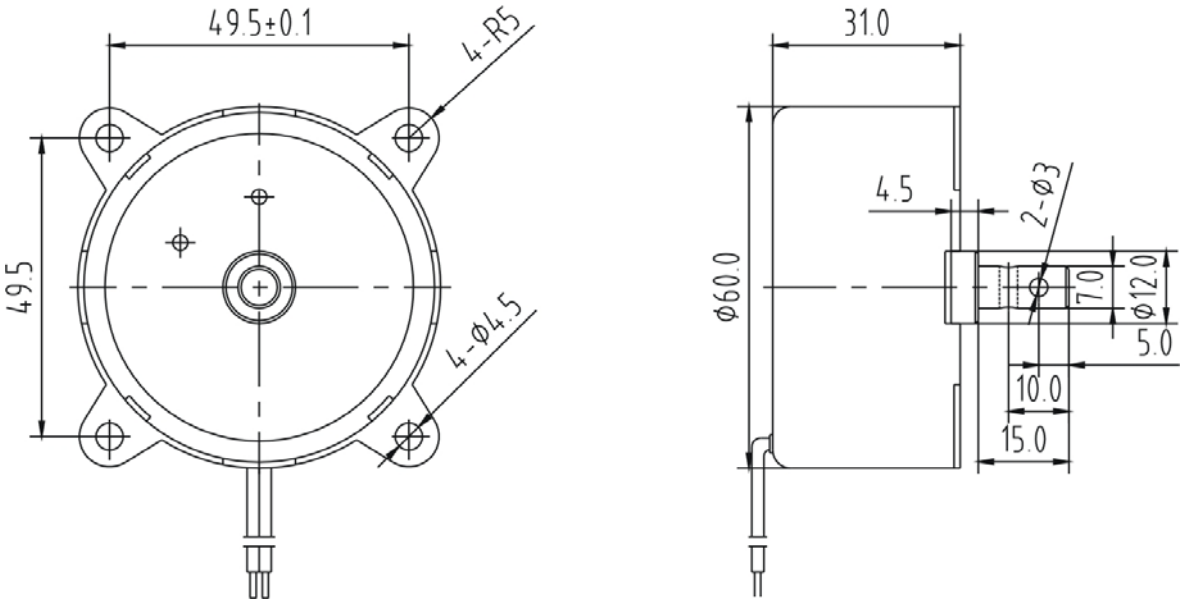

AC Oven motor S702 (Size 70mm)

Application
Household Electrical Appliances , Laminator, Auto Control Machine , Spotlight and etc.

Picture


Safety	
Insulation resistance	DC 500V 100MΩ
Insulation strength	AC1500V, 50Hz/min(220V motor)
Insulation class	F / H
Environment	Temp.-10℃~+125℃
Certification	CE RoHS CCC

Specification

Model	Output speed (rpm)	Output Torque (kg.cm) S1 continuous	S2 15 minutes	S2 5 minutes	Voltage (V.AC)	Current (A)	Frequency (Hz)	Input Power (W)	Noise (dB)	Rotation
S702-12-02	2		12/ 18		110 220 230	<0.07 <0.35 <0.40	50/60Hz	4-6	<45	CW/CCW (Free)

Note: Above datas are from motors under 50Hz. If under 60Hz, Speed*1.2 , Torque/1.2
Other speed and torque needed, please contact our sale department

Mechanical Dimensions

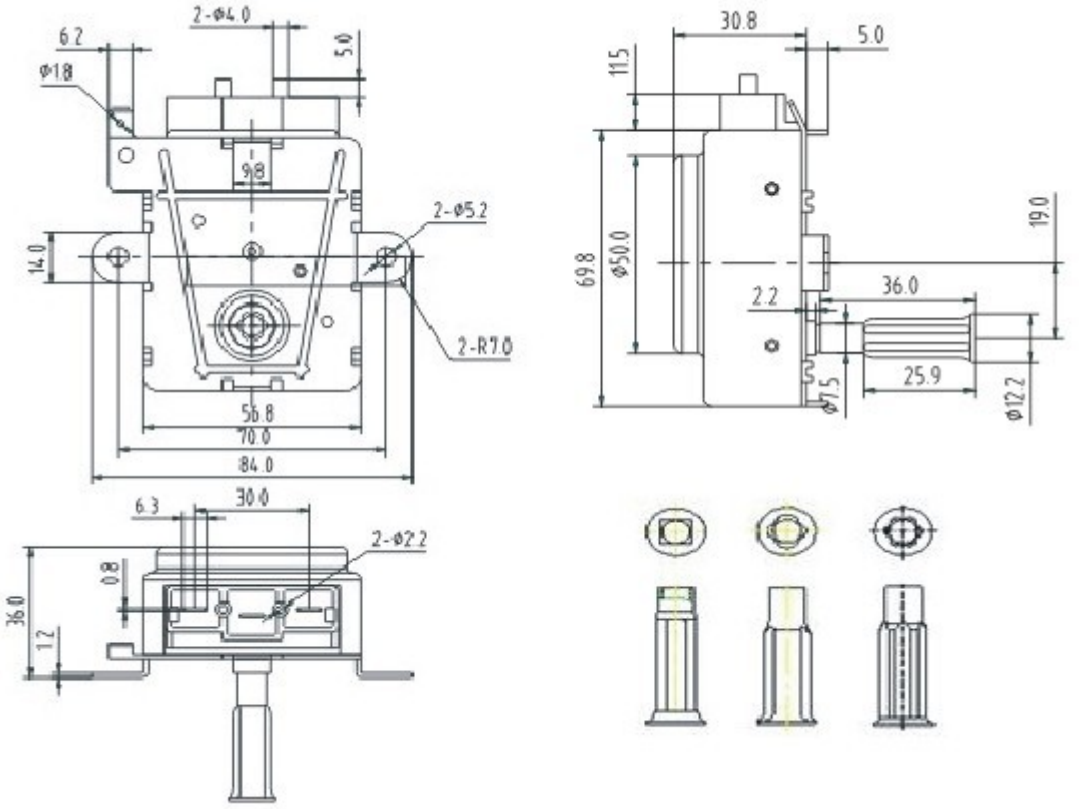

AC Oven motor S522 (Size 52mm)

Application
Household Electrical Appliances , Laminator, Auto Control Machine , Spotlight and etc.

Safety	
Insulation resistance	DC 500V 100MΩ
Insulation strength	AC1500V, 50Hz/min(220V motor)
Insulation class	H
Environment	Temp.-10℃~+125℃
Certification	CE RoHS

Picture



Specification

Model	Output speed (rpm)	Output Torque (kg.cm)			Voltage (V.AC)	Current (A)	Frequency (Hz)	Input Power (W)	Noise (dB)	Rotation
		S1 continuous	S2 15 minutes	S2 5 minutes						
S522-1006	2	10 / 8.7			110 220 230	<0.06 <0.03 <0.033	50/60Hz	4-4.5	<40	Unidirection / Free

Note: Above datas are from motors under 50Hz. If under 60Hz, Speed*1.2 , Torque/1.2
Other speed and torque needed, please contact our sale department

Mechanical Dimensions

