I.CH MOTION CO., LTD
MOTION WORLD

I.CH PM STEP MOTOR



I.CH Motor PM series from 10BY to 57BY are our main products. Step Angle is 18° , 15° and 7.5° .

Structure and Characteristic of DC motor

PM series motor mainly used in printers, copycat, fax machine and some computer, medical care, lighting, industry automatic related equipment.

Product Number Code For PM Stepping Motor

P 25 1 xxx x - X

- P: PM Stepper Motor
- 25: Dimension of Motor, 25-→ ¢25mm
- 1: 1=7.5 degree; 2=15 degree; 3=18 degree; 4= Gear Motor; 5= Gearbox Motor; 6= Hollow shaft Motor
- xxx: Torque, 006=0.06kg.cm, 150=1.5kg.cm
- x: 4 = 4 leads (2 phase); 6 = 6 leads (4 phase)
- X: Motor no. : A,B,C……

PM STEP MOTOR P153 (15MM)

Application

Mainly used in printer, scanner, stage light etc.

Complementary Products:

- Output Shaft
- Assembling Size
- Lead Wire or Terminal

Picture



Specification

MODEL	No.of phase	Excita-tion	Step Angle °	Voltage V	Current A	Resistance Ω	Inductance mH	Holding Torque g.cm	Detent Torque g.cm	Rotor Inertia g.cm2	Stepping Accuracy
P153-0024A1	2	2-2	18	5	0.33	15	3	25	5	<1.0	18°±7%
P153-0024B1	2	2-2	18	7.2	0.15	50	9.5	25	10	<1.0	18°±3%
P153-0024C1	2	2-2	18	12	0.12	100	20	25	20	0.2	18°±7%
P153-0034D1	2	2-2	18	5	0.5	10	2	27	10	<1.0	18°±7%

Mechanical Dimensions

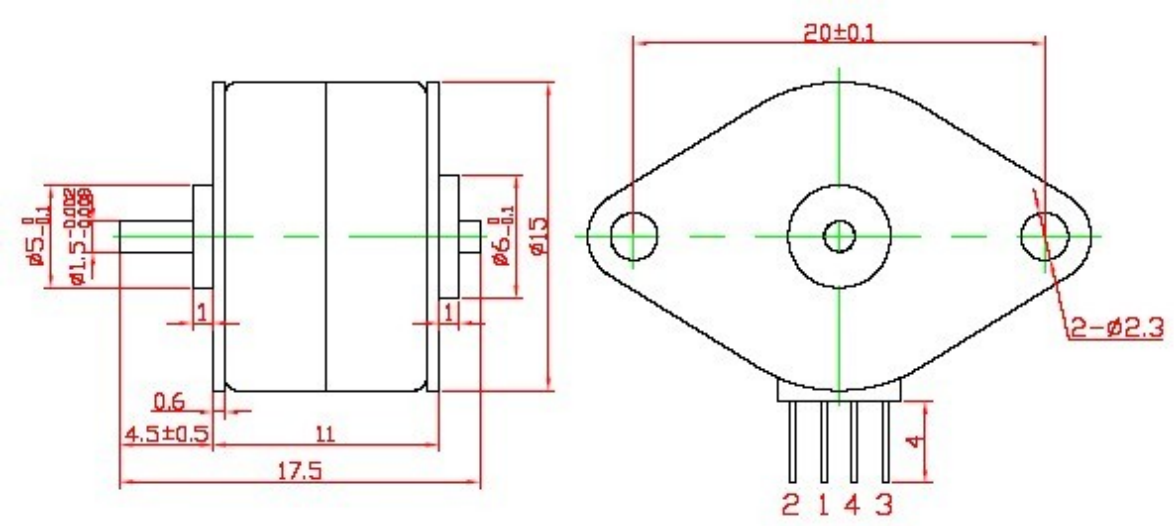

Standard Leadwire Configuration

4 leads

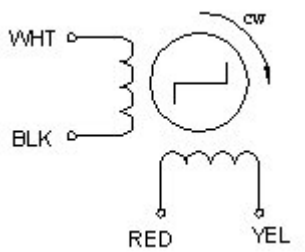

Wire Color	Step 1	2	3	4
WHT	-			-
BLK		-	-	
RED	-	-		
YEL			-	-

PM STEP MOTOR P203(20mm)

Application

Mainly used in printer, scanner, stage light etc.

Picture



Complementary Products:

- Output Shaft
- Assembling Size
- Lead Wire or Terminal

Specification

MODEL	No.of phase	Excita -tion	Step Angle	Voltage	Current	Resistance	Inductance	Holding Torque	Detent Torque	Rotor Inertia	Stepping Accuracy
			°	V	A	Ω	mH	g.cm	g.cm	g.cm2	
P203-0094A1	2	2-2	18	12	0.08	280	81.7	>90	<20	<1.0	18°±7%
P203-0064A2	2	2-2	18	5	0.5	10	4.3	>60	<20	<1.0	18°±7%

Mechanical Dimensions

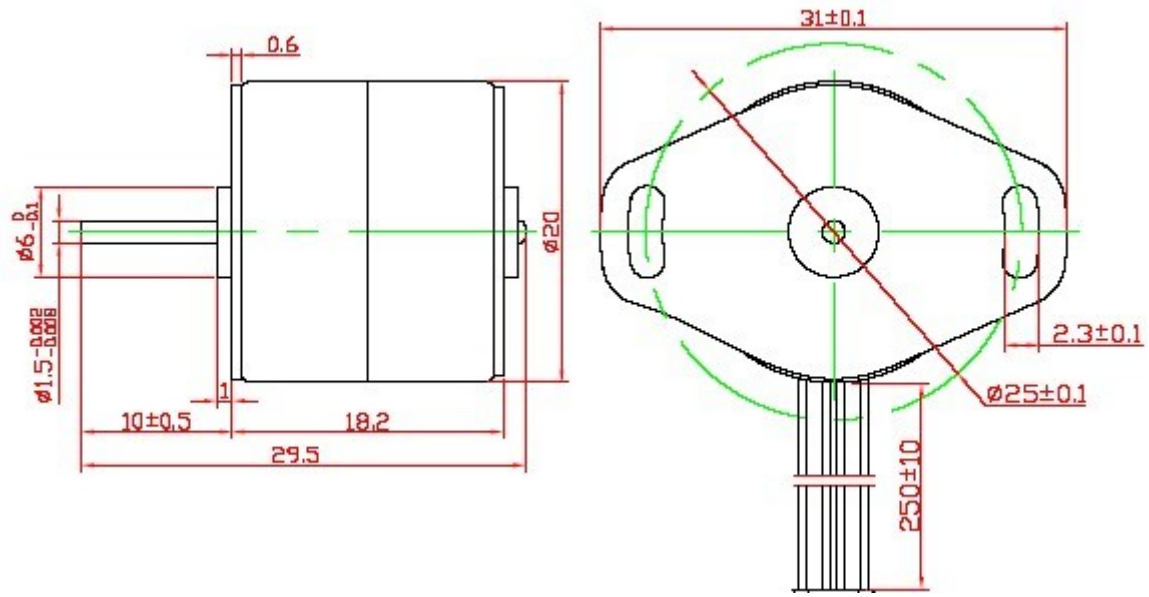

Standard Leadwire Configuration

4 leads

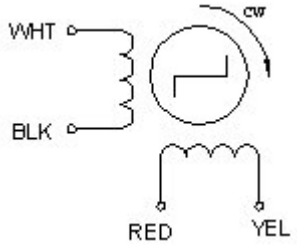

Wire Color	Step			
	1	2	3	4
WHT	-			-
BLK		-	-	
RED	-	-		
YEL			-	-

PM STEP MOTOR P251(25MM)

Application

Mainly used in printer, scanner, stage light etc.

Picture



Complementary Products:

- Output Shaft
- Assembling Size
- Lead Wire or Terminal

Specification

MODEL	No.of phase	Excita -tion	Step Angle	Current	Resistance	Inductance	Holding Torque	Detent Torque	Rotor Inertia	Lead Wires	Stepping Accuracy
			°	A	Ω	mH	g.cm	g.cm	g.cm2	No.	
P251-0126A1	4	2-2	7.5	0.5	10	2.1	120	45	<1.0	6	7.5°±7%
P251-0096A2	4	2-2	7.5	0.15	80	18	>90	<20	<1.0	6	7.5°±7%
P251-0136A3	4	2-2	15	0.4	30	6	>130	<75	<1.0	6	15°±7%

Mechanical Dimensions

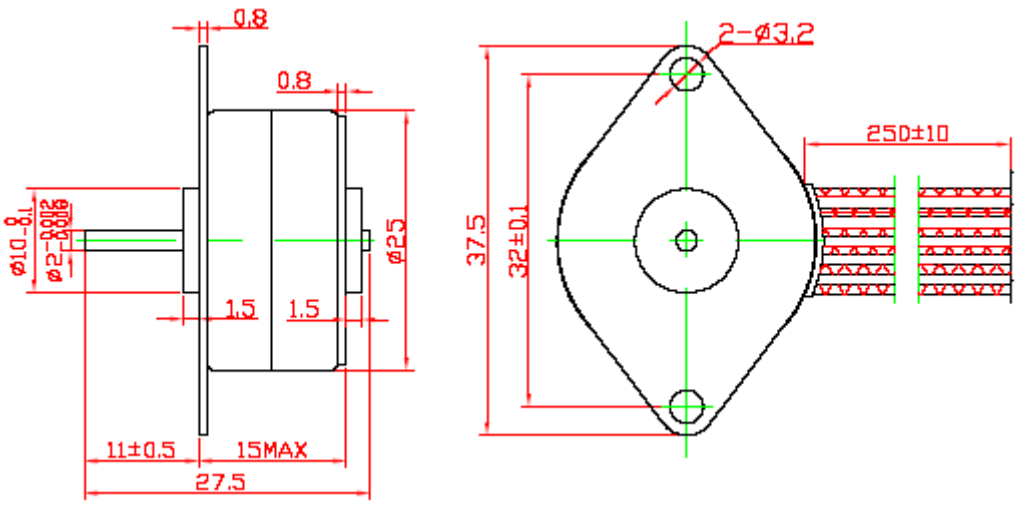

Standard Leadwire Configuration

6 leads

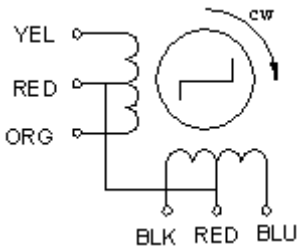

Pin No.	Wire Color	Step 1	2	3	4
1	YEL	-			-
2	BLK	-	-		
3	RED	+	+	+	+
4	RED	+	+	+	+
5	ORG		-	-	
6	BLU			-	-

PM STEP MOTOR P352/351(35MM)

Application

Mainly used in printer, scanner, stage light etc.

Picture



Complementary Products:

- Output Shaft
- Assembling Size
- Lead Wire or Terminal

Specification

MODEL	No.of phase	Excita -tion	Step Angle	Voltage	Current	Resistance	Inductance	Holding Torque	Detent Torque	Rotor Inertia	Figure
			°	V	A	Ω	mH	g.cm	g.cm	g.cm2	
P352-0456	4	2-2	15	24	0.28	85	36.4	450	125	<7.5	Figure 1
P351-0556	4	2-2	7.5	24	0.22	110	54.2	550	45	<7.5	Figure 1
P351-0306	4	2-2	7.5	12	0.26	47	16.5	300	65	<7.5	Figure 2

Mechanical Dimensions

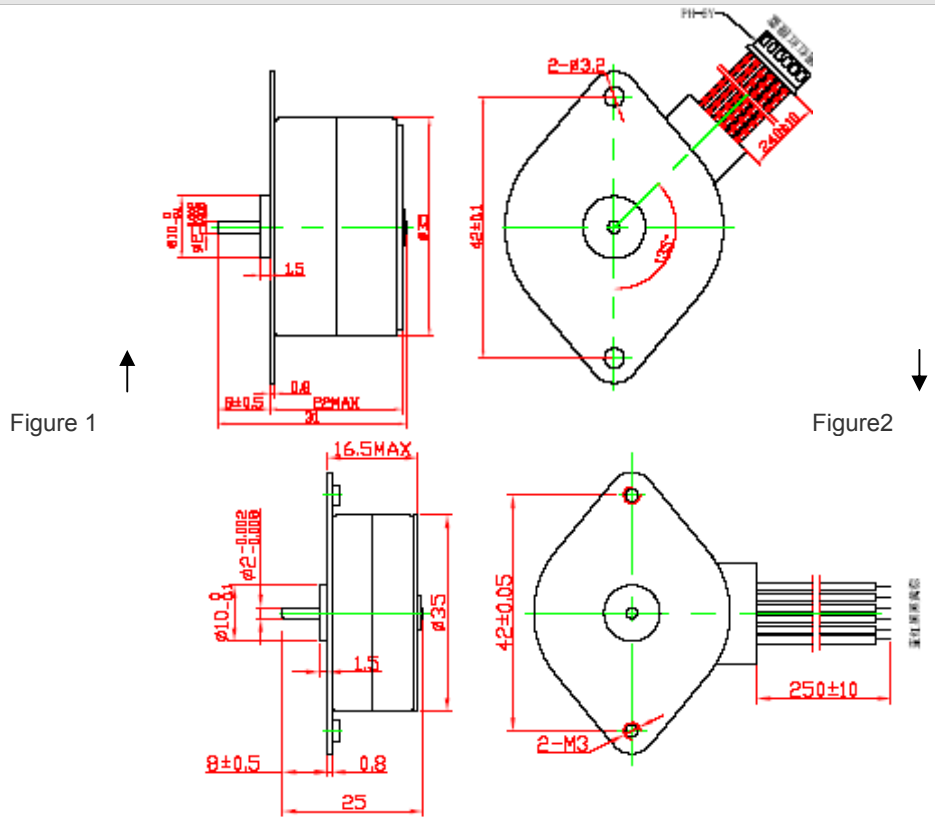

Figure 1

Figure2

Standard Leadwire Configuration

6 leads

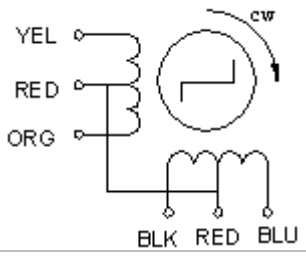

Pin No.	Wire Color	Step 1	2	3	4
1	YEL	-			-
2	BLK	-	-		
3	RED	+	+	+	+
4	RED	+	+	+	+
5	ORG		-	-	
6	BLU			-	-

PM STEP MOTOR P421(42MM)

Application
Mainly used in printer, scanner, stage light etc.

Complementary Products:
● Output Shaft ● Assembling Size ● Lead Wire or Terminal

Picture


Specification											
MODEL	No.of phase	Excita -tion	Step Angle	Voltage	Current	Resistance	Inductance	Holding Torque	Detent Torque	Rotor Inertia	Figure
			°	V	A	Ω	mH	g.cm	g.cm	g.cm2	
P421-0806A1	4	2-2	7.5	24	0.24	100	61	800	210	<9.6	Figure 1
P421-0456	4	4-2	7.5	12	0.2	60	50	450	125	<7.5	Figure 2
P421-0806A2	4	2-2	7.5	12	0.8	15	12	800	210	<9.6	Figure 3

Mechanical Dimensions

Figure 1

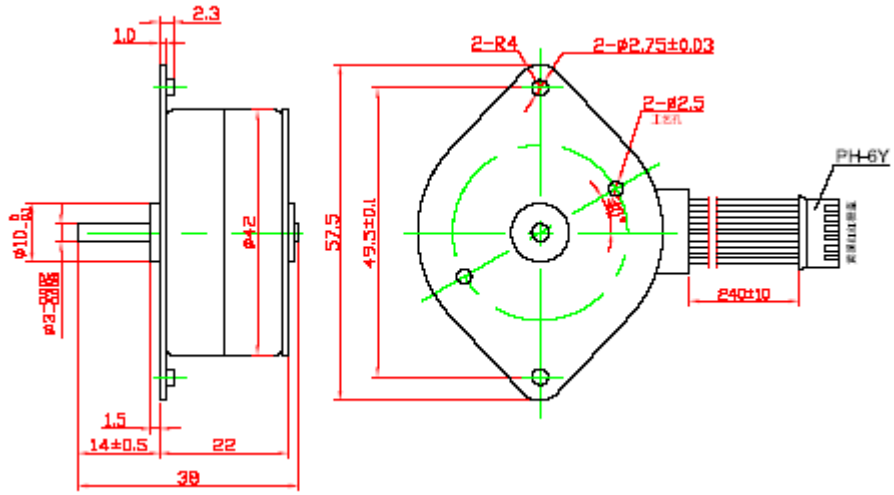

Figure 2

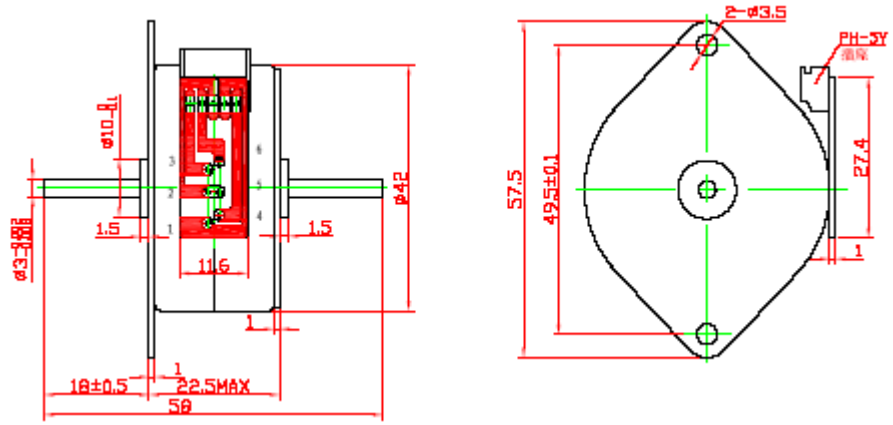

Figure 3

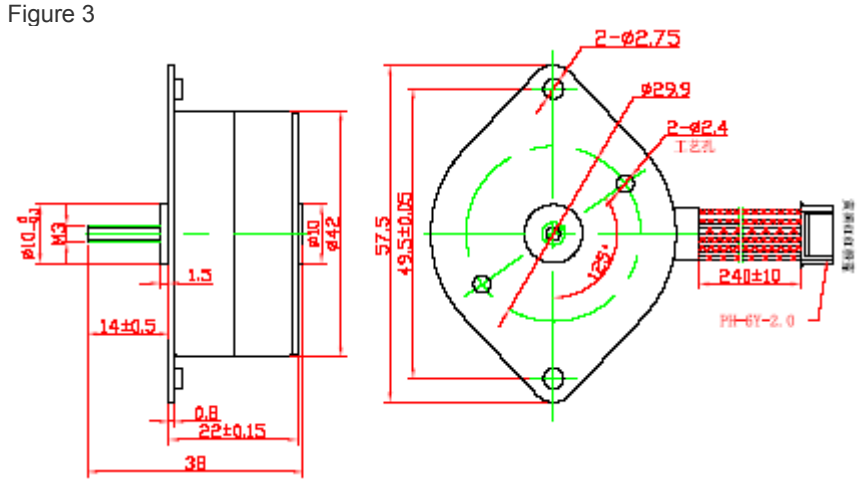

Standard Leadwire Configuration

6 leads

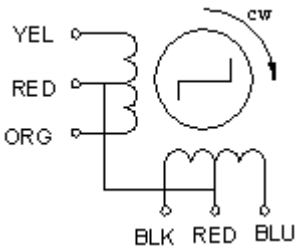

Pin No.	Wire Color	Step			
		1	2	3	4
1	YEL	-			-
2	BLK	-	-		
3	RED	+	+	+	+
4	RED	+	+	+	+
5	ORG		-	-	
6	BLU			-	-

PM STEP MOTOR P491(49MM)

Application
Mainly used in printer, scanner, stage light etc.

Complementary Products:
● Output Shaft ● Assembling Size ● Lead Wire or Terminal

Picture


Specification											
MODEL	No.of phase	Excita -tion	Step Angle	Voltage	Current	Resistance	Inductance	Holding Torque	Detent Torque	Rotor Inertia	Figure
			°	V	A	Ω	mH	g.cm	g.cm	g.cm2	
P491-1704	2	2-2	7.5	5	0.9	5.5	61	1700	350	<14.5	Figure 1

Mechanical Dimensions

Figure 1

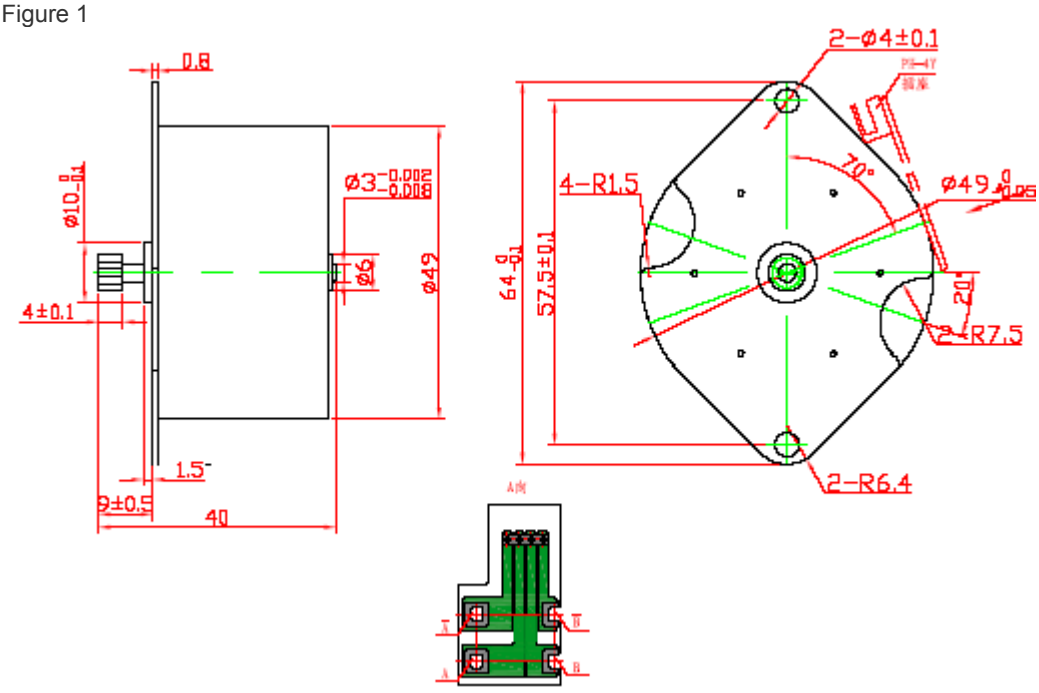

Standard Leadwire Configuration

4 leads

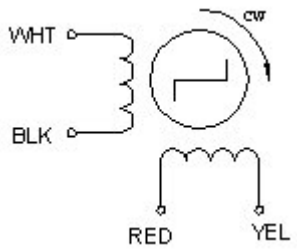

Wire Color	Step			
	1	2	3	4
WHT	-			-
BLK		-	-	
RED	-	-		
YEL			-	-

PM STEP MOTOR P571(57MM)

Application
Mainly used in printer, scanner, stage light etc.

Complementary Products:
• Output Shaft • Assembling Size • Lead Wire or Terminal

Picture


Specification

MODEL	No.of phase	Excita -tion	Step Angle	Voltage	Current	Resistance	Inductance	Holding Torque	Detent Torque	Rotor Inertia	Figure
			°	V	A	Ω	mH	g.cm	g.cm	g.cm2	
P571-1506	4	2-2	7.5	12	0.6	21	24.2	1500	425	<34	Figure 1

Mechanical Dimensions

Figure 1

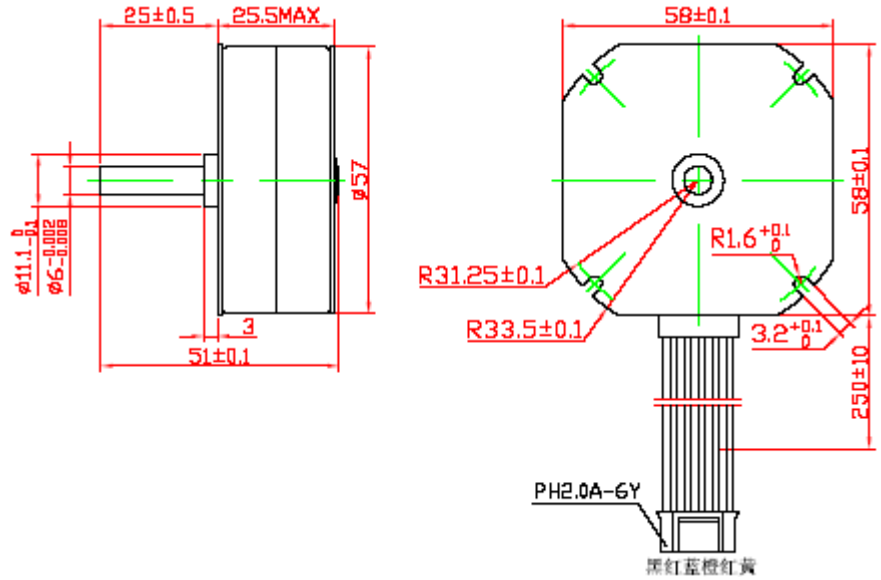

Standard Leadwire Configuration

6 leads

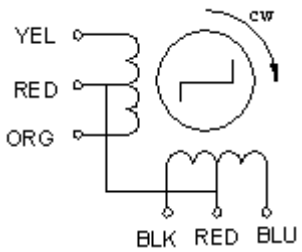

Pin No.	Wire Color	Step 1	2	3	4
1	YEL	-			-
2	BLK	-	-		
3	RED	+	+	+	+
4	RED	+	+	+	+
5	ORG		-	-	
6	BLU			-	-

HALLOW SHAFT P251(25mm)

Application

Mainly used in printer, scanner, stage light etc.

Picture



Complementary Products:

- Output Shaft
- Assembling Size
- Lead Wire or Terminal

Specification

MODEL	No. of phase	Excita -tion	Step Angle	Voltage	Current	Resistance	Inductance	Holding Torque	Detent Torque	Rotor Inertia	Figure
			°	V	A	Ω	mH	g.cm	g.cm	g.cm2	
P251-0084	2	2-2	7.5	5	0.25	20±10%	11±20%	80	<30	<1.0	Figure 1
P251-0106	2	2-2	7.5	5	0.25	20±10%	4.16±20%	>100	<30	<1.0	Figure 1

Mechanical Dimensions

Figure 1

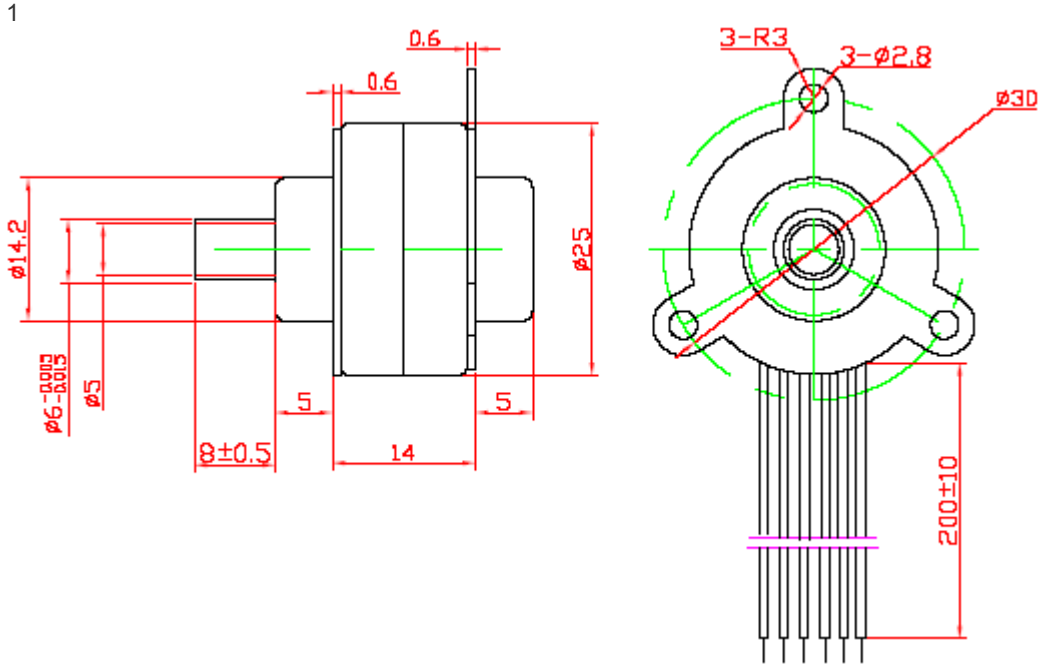

Standard Leadwire Configuration

4 leads

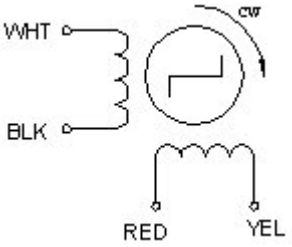

Wire Color	Step 1	2	3	4
WHT	-			-
BLK		-	-	
RED	-	-		
YEL			-	-

6 leads

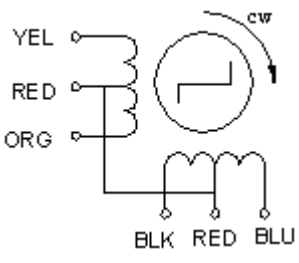

Pin No.	Wire Color	Step 1	2	3	4
1	YEL	-			-
2	BLK	-	-		
3	RED	+	+	+	+
4	RED	+	+	+	+
5	ORG		-	-	
6	BLU			-	-