HP571



Appearance Size

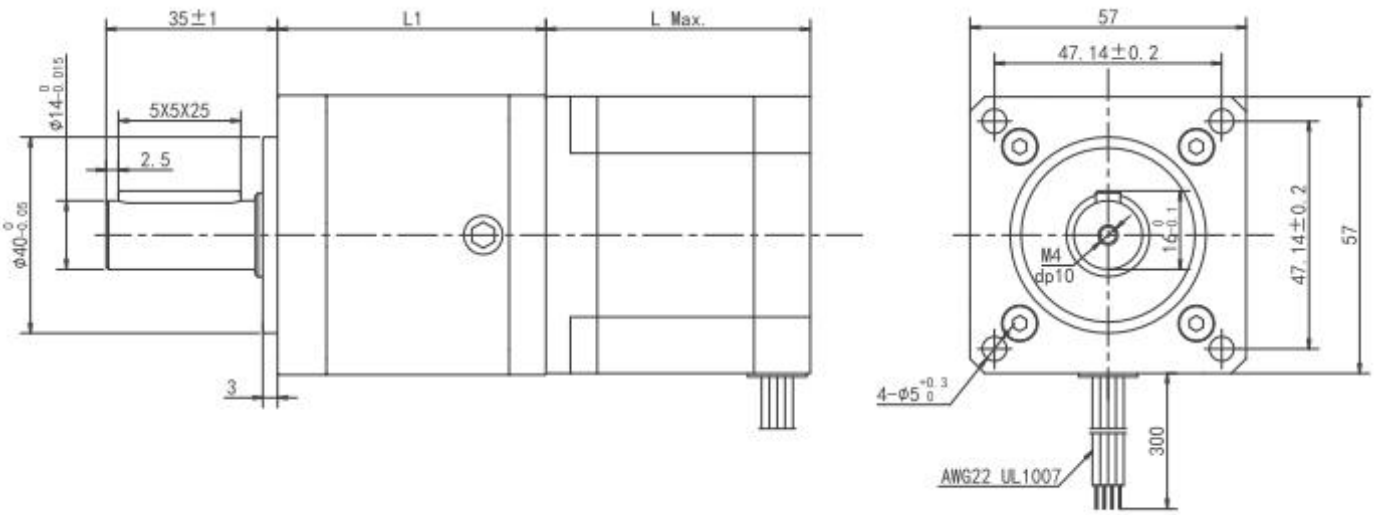

Motor Electrical Specification

Series Model	Step Angle (o)	L(mm)	Rated Current (A)	Phase Resistance (Ω)	Phase Inductance (mH)	Holding Torque(N.m)	Lead Wire (NO.)	Motor Weight (kg)
HP571-11042	1.8	56	4.2	0.35	1.2	1.1	4	0.68
HP571-18042	1.8	76	4.2	0.55	1.8	1.8	4	1.05
HP571-25042	1.8	100	4.2	0.75	3	2.5	4	1.25

Gearbox Specification

Ratio	5	10	15	20	25	30	40	50
Reducer Series	1		2					
Length(mm)	55		71					
Rated Torque(N.m)	25		40					
Permissible Torque(Max)(N.m)	40		60					
Efficiency(%)	95%		90%					
Weight(g)	600-800		800-960					
We can manufacture products according to customer's requirements								

©I.CH Motion® 2020
Specifications subject to change without notice.