Wiring Diagram

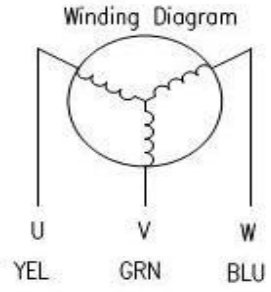

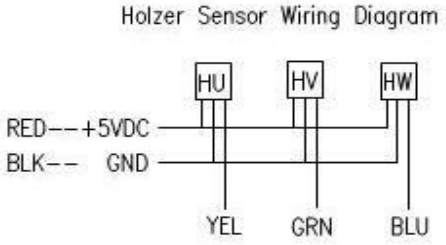



Appearance Size & Motor Installation

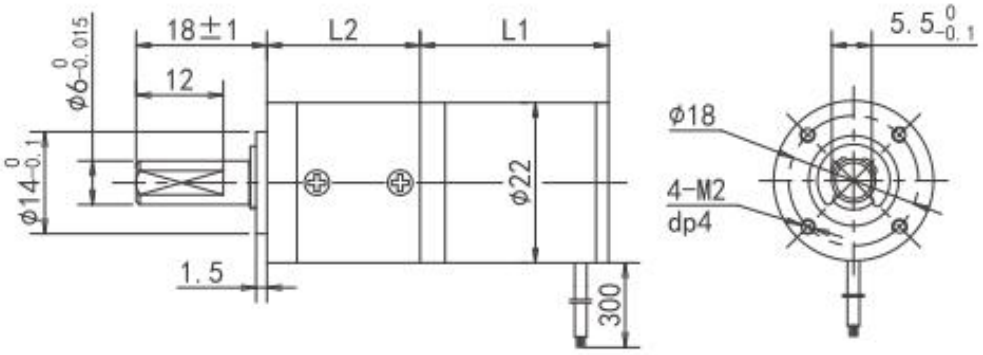

Motor Electrical Specification

Motor Model	D225-03W	D225-06W	D225-09W
Rated Voltage(VDC)	24	24	24
Rated Speed(Rpm)	4000	4000	4000
Rated Torque(N.m)	0.0075	0.015	0.0225
Rated Power(W)	3	6	9
L1 Length(mm)	34	44	54

Gearbox Electrical Specification

Reducer Series	1	2	3
Transmission efficiency	90%	81%	73%
Max radial load	10N	10N	10N
Max axial load	6N	6N	6N
Transmission torque	0.1N.m	0.4N.m	0.8N.m
Reduction Ratio	3.71,5.18	14,19,27	51,71,100,139
L2 Length(mm)	21	27.2	33.4

* Note: We can manufacture products according to customer's requirements.
Optional accessory is the encoder and brake to match this product.

* Contact sales@ichmo.com.

©I.CH Motion® 2020 www.ichmo.com
Specifications subject to change without notice. Series: DG225 BLDC MOTOR

Wiring Diagram

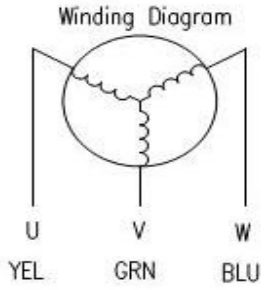

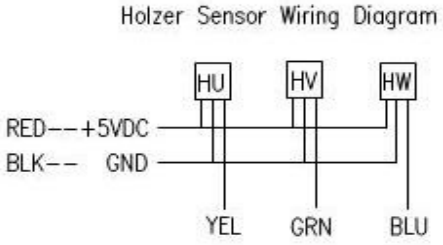



Appearance Size & Motor Installation

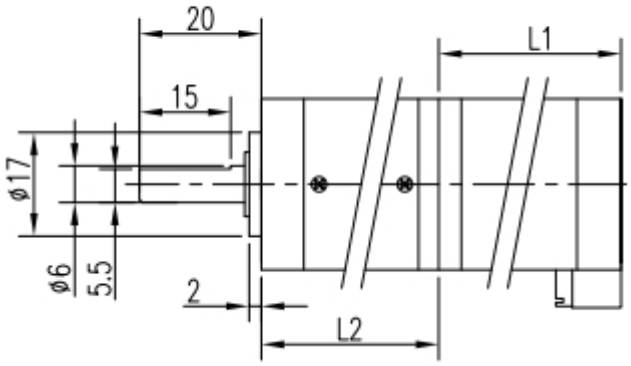

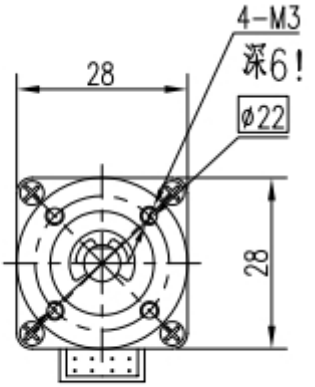

Motor Electrical Specification

Motor Model	DG285-10W	DG285-15W	DG285-20W
Rated Voltage(VDC)	24	24	24
Rated Speed(Rpm)	3000	3000	3000
Rated Torque(N.m)	0.03	0.045	0.06
Rated Power(W)	10	15	20
L1 Length(mm)	46	56	66

Gearbox Electrical Specification

Reducer Series	1	2	3
Transmission efficiency	1	2	3
Max radial load	90%	81%	73%
Max axial load	20N	20N	20N
Transmission torque	10N	10N	10N
Reduction Ratio	0.3N.m	1.2N.m	2.5N.m
L2 Length(mm)	3.7,5.2,6.75	14,19,25,27,35,45	51,71,100,139,181,236,307

* Note: We can manufacture products according to customer's requirements.
Optional accessory is the encoder and brake to match this product.

* Contact sales@ichmo.com.

©I.CH Motion® 2020 www.ichmo.com
Specifications subject to change without notice. Series: DG285 BLDC MOTOR

Wiring Diagram

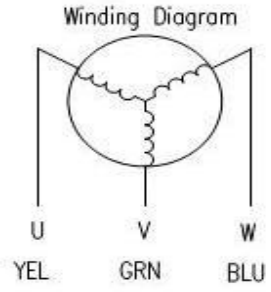

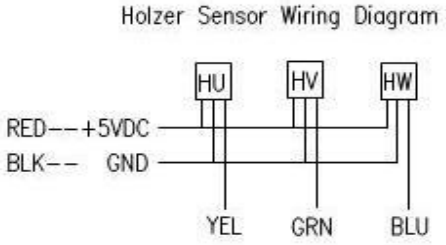



Appearance Size & Motor Installation

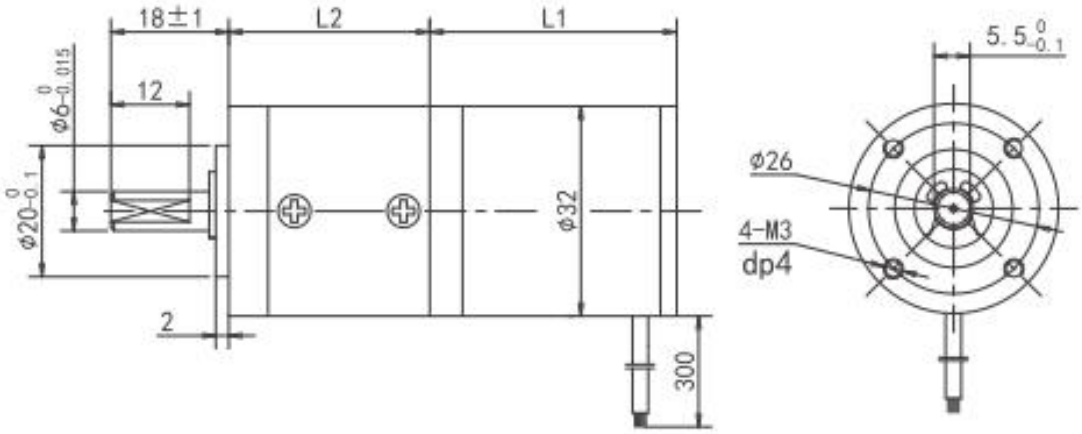

Motor Electrical Specification

Motor Model	D325-10W	D325-10W	D325-20W
Rated Voltage(VDC)	24	24	24
Rated Speed(Rpm)	4000	4000	4000
Rated Torque(N.m)	0.03	0.045	0.06
Rated Power(W)	12.5	18.8	25
L1 Length(mm)	56	66	76

Gearbox Electrical Specification

Reducer Series	1	2	3
Transmission efficiency	90%	81%	73%
Max radial load	35N	35N	35N
Max axial load	20N	20N	20N
Transmission torque	0.3N.m	1.2N.m	2.5N.m
Reduction Ratio	3.7,5.18,6.75	14,19,25,27,35,45	51,71,93,100,139,181,236,307
L2 Length(mm)	25.6	34	42

* Note: We can manufacture products according to customer's requirements.
Optional accessory is the encoder and brake to match this product.

* Contact sales@ichmo.com.

©I.CH Motion® 2020 www.ichmo.com
Specifications subject to change without notice. Series: DG325 BLDC MOTOR

Wiring Diagram

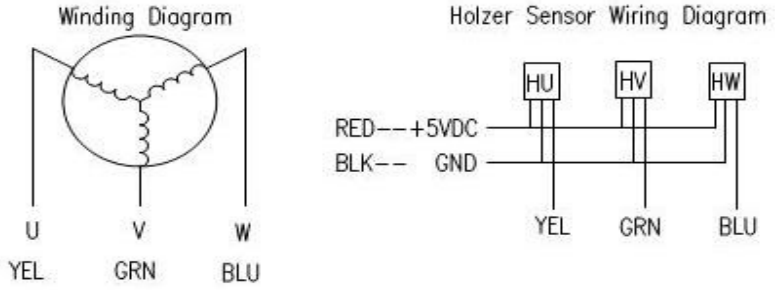



Appearance Size & Motor Installation

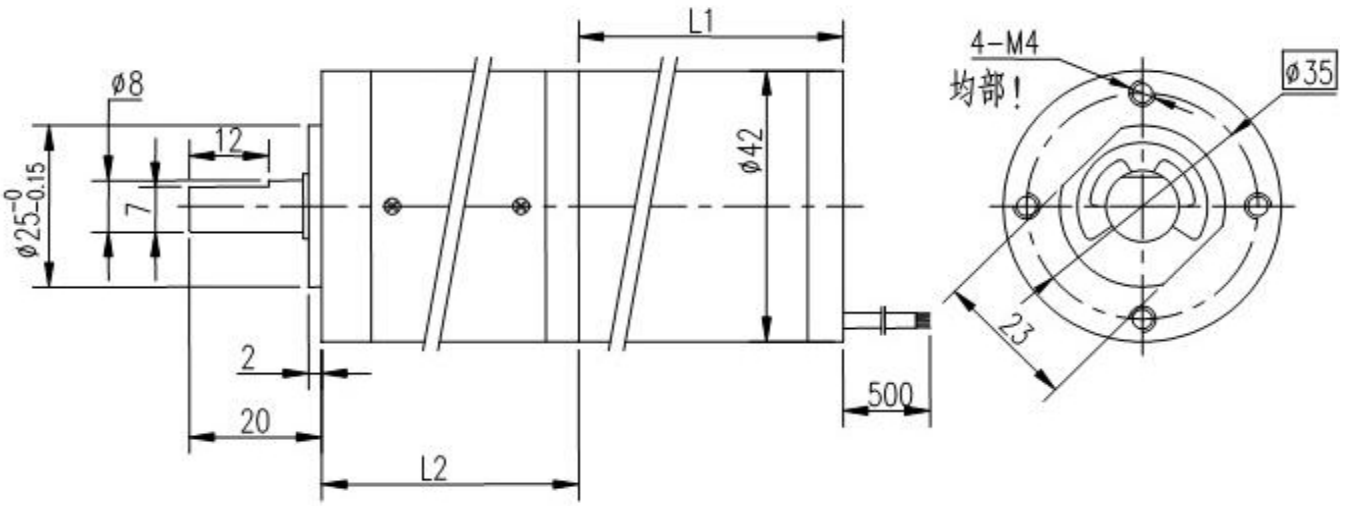

Motor Electrical Specification

Motor Model	D425-28W	D425-56W	D425-84W
Rated Voltage(VDC)	24	24	24
Rated Speed(Rpm)	3000	3000	3000
Rated Torque(N.m)	0.09	0.18	0.27
Rated Power(W)	28	56	84
L1 Length(mm)	58	78	98

Gearbox Electrical Specification

Reducer Series	1	2
Transmission efficiency	95%	90%
Max radial load	80N	80N
Max axial load	30N	30N
Transmission torque	12N.m	20N.m
Reduction Ratio	5 ,10	20,25,40,50,100
L2 Length(mm)	28.5	38

* Note: We can manufacture products according to customer's requirements.
Optional accessory is the encoder and brake to match this product.

* Contact sales@ichmo.com.

©I.CH Motion® 2020 www.ichmo.com
Specifications subject to change without notice. Series: DG425 BLDC MOTOR

Wiring Diagram

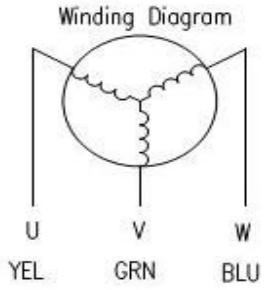

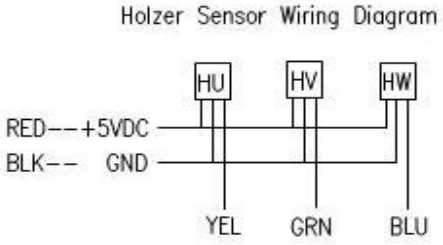

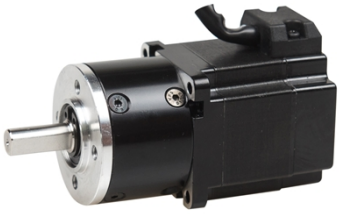

Appearance Size & Motor Installation

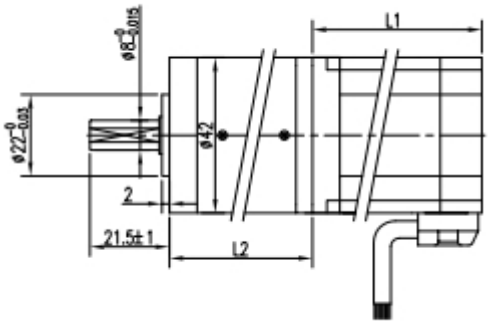

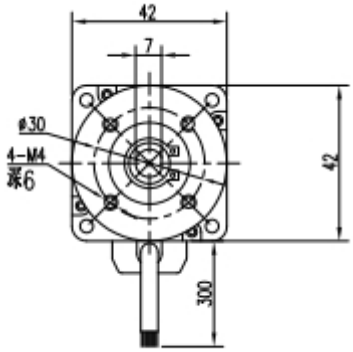

Motor Electrical Specification

Motor Model	DG425-31W	DG425-63W	DG425-94W
Rated Voltage(VDC)	24	24	24
Rated Speed(Rpm)	3000	3000	3000
Rated Torque(N.m)	0.1	0.2	0.3
Rated Power(W)	31	63	94
L1 Length(mm)	47	67	87

Gearbox Electrical Specification

Reducer Series	1	2
Transmission efficiency	95%	90%
Max radial load	80N	80N
Max axial load	30N	30N
Transmission torque	12N.m	20N.m
Reduction Ratio	4,5,10	16,20,25,40,50,100
L2 Length(mm)	33.5	43

* Note: We can manufacture products according to customer's requirements.
Optional accessory is the encoder and brake to match this product.

* Contact sales@ichmo.com.

©I.CH Motion® 2020 www.ichmo.com
Specifications subject to change without notice. Series: DG425 BLDC MOTOR

Wiring Diagram

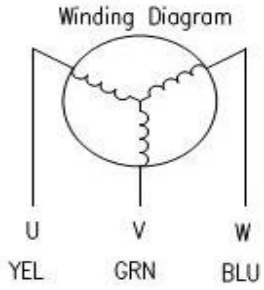

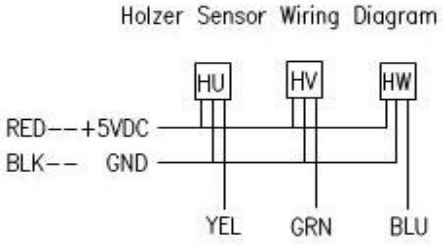

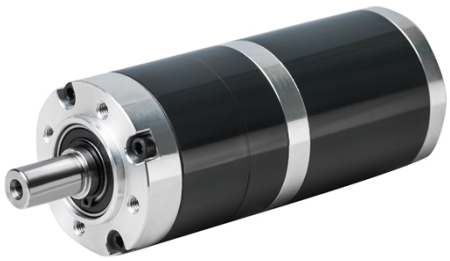

Appearance Size & Motor Installation

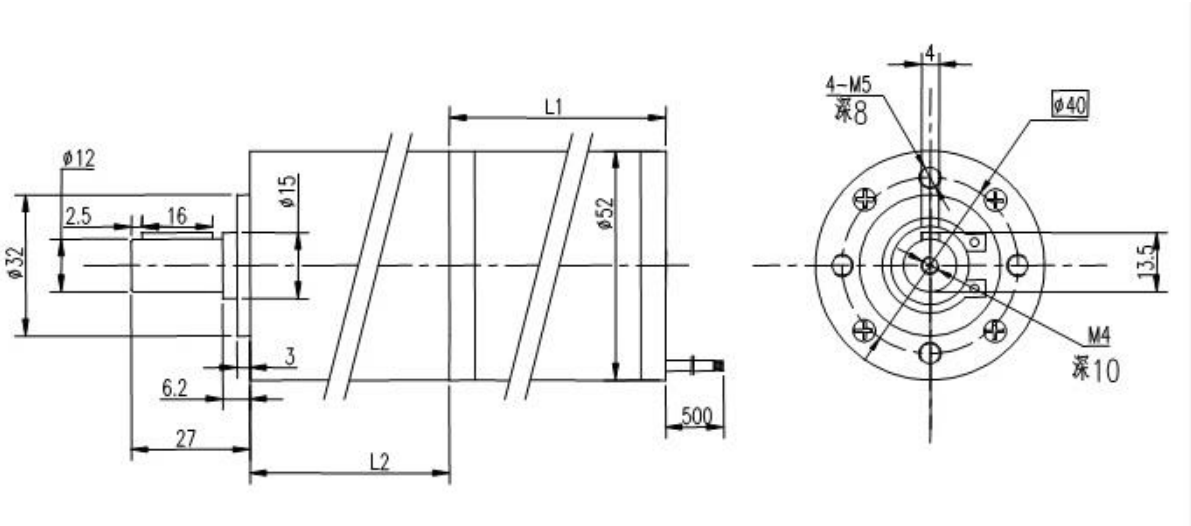

Motor Electrical Specification

Motor Model	DG525-31W	DG525-63W	DG525-94W
Rated Voltage(VDC)	24	24	24
Rated Speed(Rpm)	3000	3000	3000
Rated Torque(N.m)	0.1	0.2	0.3
Rated Power(W)	31	63	94
L1 Length(mm)	59	79	99

Gearbox Electrical Specification

Reducer Series	1	2
Transmission efficiency	90%	81%
Max radial load	80N	80N
Max axial load	30N	30N
Transmission torque	12N.m	20N.m
Reduction Ratio	5,10	20,25,40,50,100
L2 Length(mm)	35.5	45

* Note: We can manufacture products according to customer's requirements.
Optional accessory is the encoder and brake to match this product.

* Contact sales@ichmo.com.

©I.CH Motion® 2020 www.ichmo.com
Specifications subject to change without notice. Series: DG525 BLDC MOTOR

Wiring Diagram

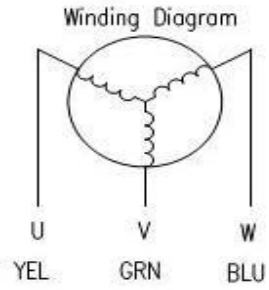

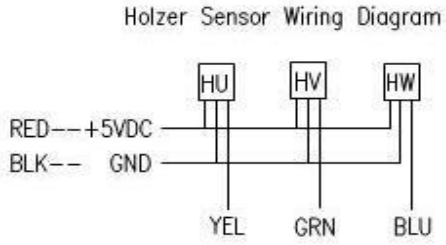



Appearance Size & Motor Installation

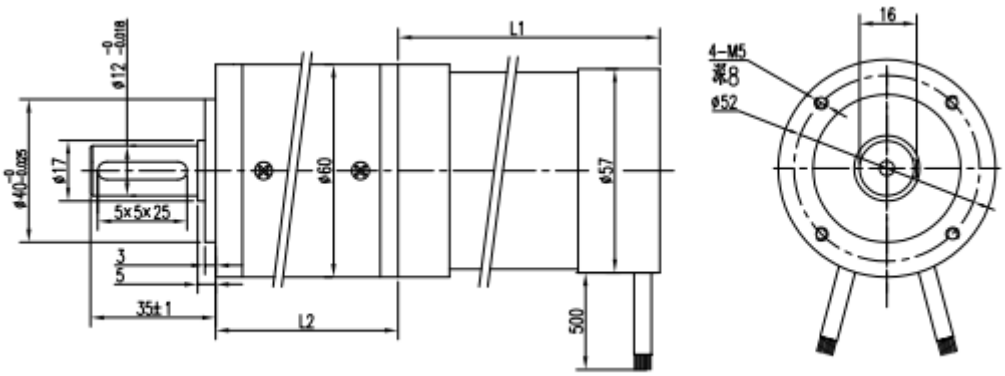

Motor Electrical Specification

Motor Model	DG575-70W	DG575-140W	DG575-210W
Rated Voltage(VDC)	48	48	48
Rated Speed(Rpm)	3000	3000	3000
Rated Torque(N.m)	0.22	0.44	0.66
Rated Power(W)	70	140	210
L1 Length(mm)	55	75	95

Gearbox Electrical Specification

Reducer Series	1	2
Transmission efficiency	95%	90%
Max radial load	80N	80N
Max axial load	30N	30N
Transmission torque	15N.m	25N.m
Reduction Ratio	5,10	15,20,25,30,40,50,100
L2 Length(mm)	58	75

* Note: We can manufacture products according to customer's requirements.
Optional accessory is the encoder and brake to match this product.

* Contact sales@ichmo.com.

©I.CH Motion® 2020 www.ichmo.com
Specifications subject to change without notice. Series: DG575 BLDC MOTOR

Wiring Diagram

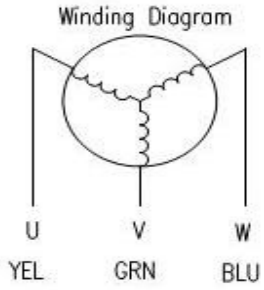

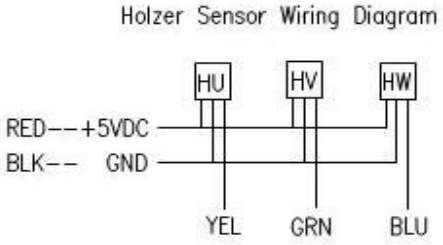

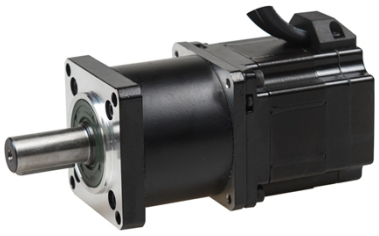

Appearance Size & Motor Installation

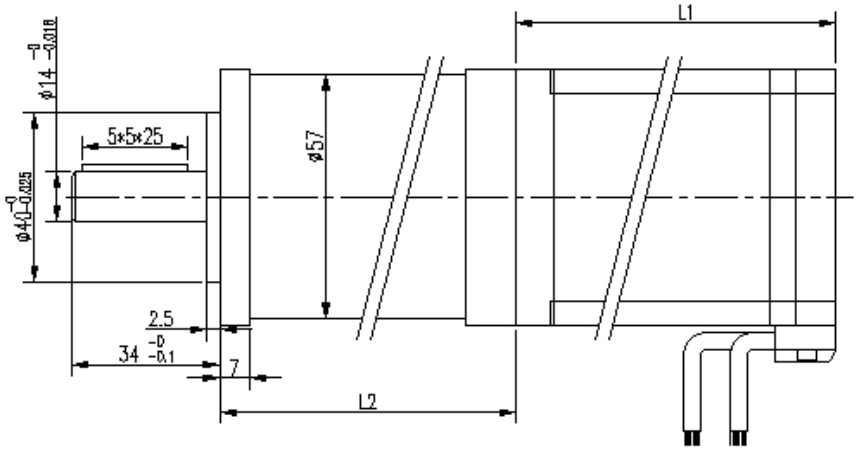

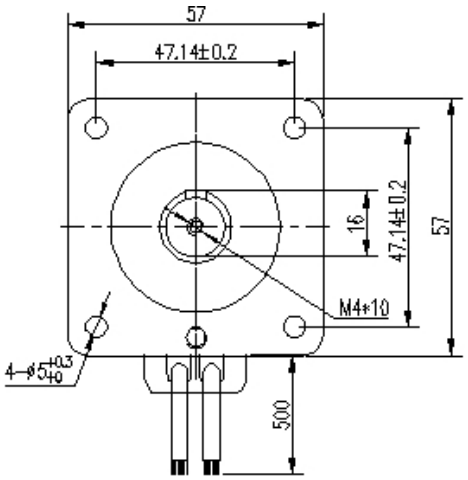

Motor Electrical Specification

Motor Model	DG575-60W	DG575-120W	DG575-180W
Rated Voltage(VDC)	48	48	48
Rated Speed(Rpm)	3000	3000	3000
Rated Torque(N.m)	0.2	0.4	0.6
Rated Power(W)	60	120	180
L1 Length(mm)	58	78	98

Gearbox Electrical Specification

Reducer Series	1	2
Transmission efficiency	95%	90%
Max radial load	80N	80N
Max axial load	30N	30N
Transmission torque	40N.m	60N.m
Reduction Ratio	5,10	15,20,,25,30,40,50
L2 Length(mm)	55	71

* Note: We can manufacture products according to customer's requirements.
Optional accessory is the encoder and brake to match this product.

* Contact sales@ichmo.com.

©I.CH Motion® 2020 www.ichmo.com
Specifications subject to change without notice. Series: DG575 BLDC MOTOR

Wiring Diagram

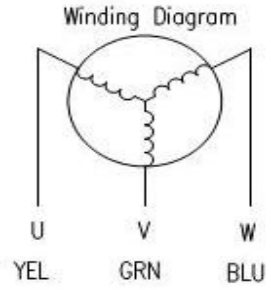

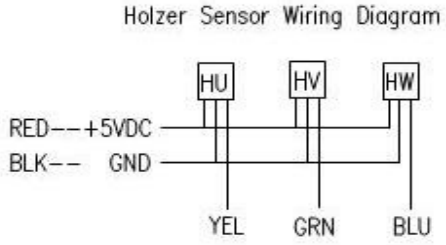



Appearance Size & Motor Installation

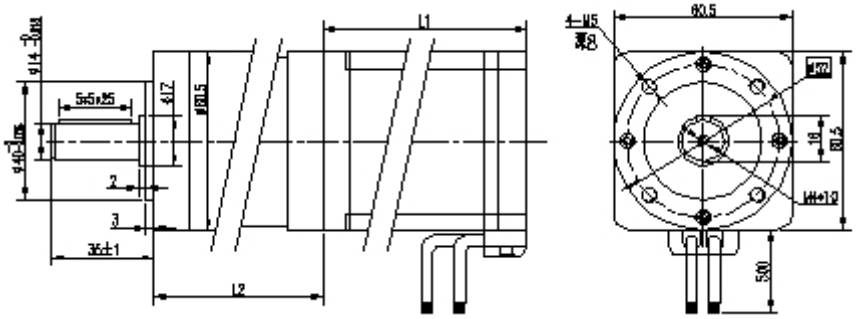

Motor Electrical Specification

Motor Model	DG605-78W	DG605-156W	DG605-234W
Rated Voltage(VDC)	48	48	48
Rated Speed(Rpm)	3000	3000	3000
Rated Torque(N.m)	0.25	0.5	0.75
Rated Power(W)	78	156	234
L1 Length(mm)	66	87	108

Gearbox Electrical Specification

Reducer Series	1	2
Transmission efficiency	95%	90%
Max radial load	80N	80N
Max axial load	30N	30N
Transmission torque	40N.m	60N.m
Reduction Ratio	5,10	15,20,25,30,40,50
L2 Length(mm)	58	75

* Note: We can manufacture products according to customer's requirements.
Optional accessory is the encoder and brake to match this product.

* Contact sales@ichmo.com.

©I.CH Motion® 2020 www.ichmo.com
Specifications subject to change without notice. Series: DG605 BLDC MOTOR

Wiring Diagram

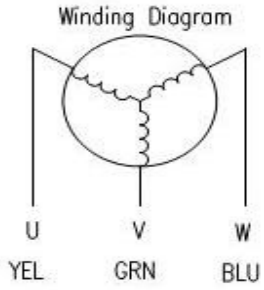

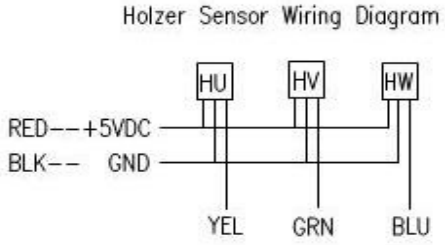



Appearance Size & Motor Installation

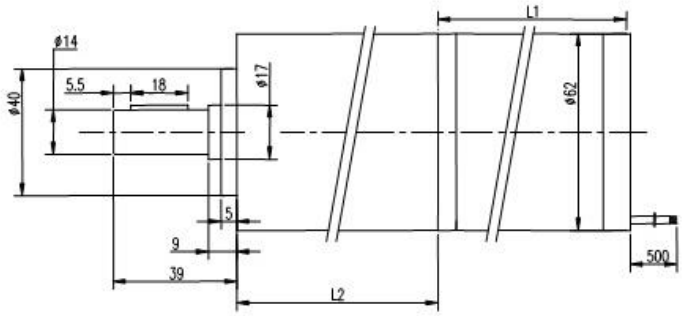

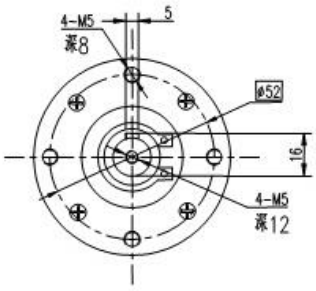

Motor Electrical Specification

Motor Model	D625-125W	D625-250W
Rated Voltage(VDC)	48	48
Rated Speed(Rpm)	3000	3000
Rated Torque(N.m)	0.4	0.8
Rated Power(W)	125	250
L1 Length(mm)	71	101

Gearbox Electrical Specification

Reducer Series	1	2
Transmission efficiency	1	2
Max radial load	95%	90%
Max axial load	80N	80N
Transmission torque	30N	30N
Reduction Ratio	40N.m	60N.m
L2 Length(mm)	5,10	15,20,25,30,40,50

* Note: We can manufacture products according to customer's requirements.
Optional accessory is the encoder and brake to match this product.

* Contact sales@ichmo.com.

©I.CH Motion® 2020 www.ichmo.com
Specifications subject to change without notice. Series: DG625 BLDC MOTOR

Wiring Diagram

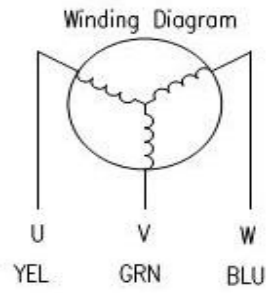

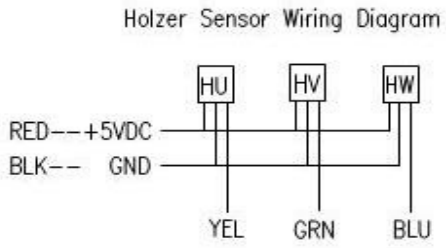

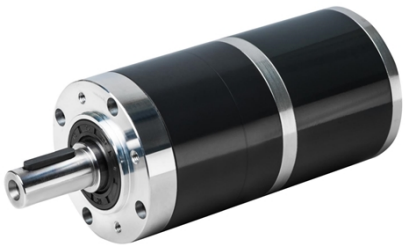

Appearance Size & Motor Installation

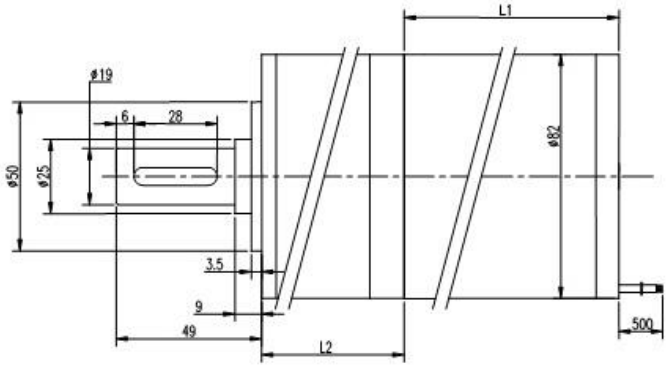

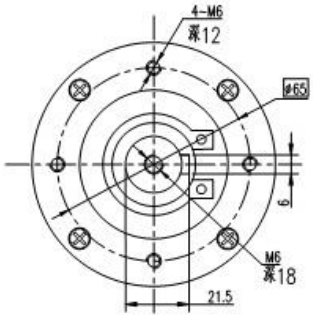

Motor Electrical Specification

Motor Model	DG825-188W
Rated Voltage(VDC)	48
Rated Speed(Rpm)	3000
Rated Torque(N.m)	0.6
Rated Power(W)	188
L1 Length(mm)	93

Gearbox Electrical Specification

Reducer Series	1	2
Transmission efficiency	95%	90%
Max radial load	800N	800N
Max axial load	150N	150N
Transmission torque	100N.m	160N.m
Reduction Ratio	5,10	15,20,25,30,40,50
L2 Length(mm)	58	77

* Note: We can manufacture products according to customer's requirements.
Optional accessory is the encoder and brake to match this product.

* Contact sales@ichmo.com.

©I.CH Motion® 2020 www.ichmo.com
Specifications subject to change without notice. Series: DG825 BLDC MOTOR

Wiring Diagram

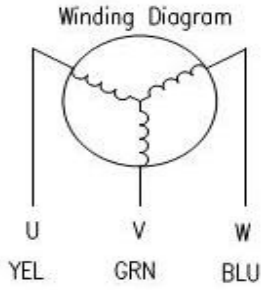

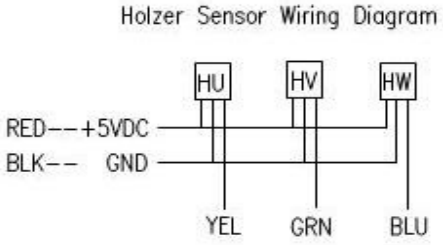

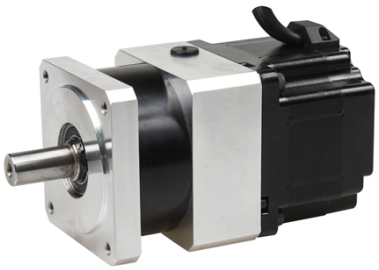

Appearance Size & Motor Installation

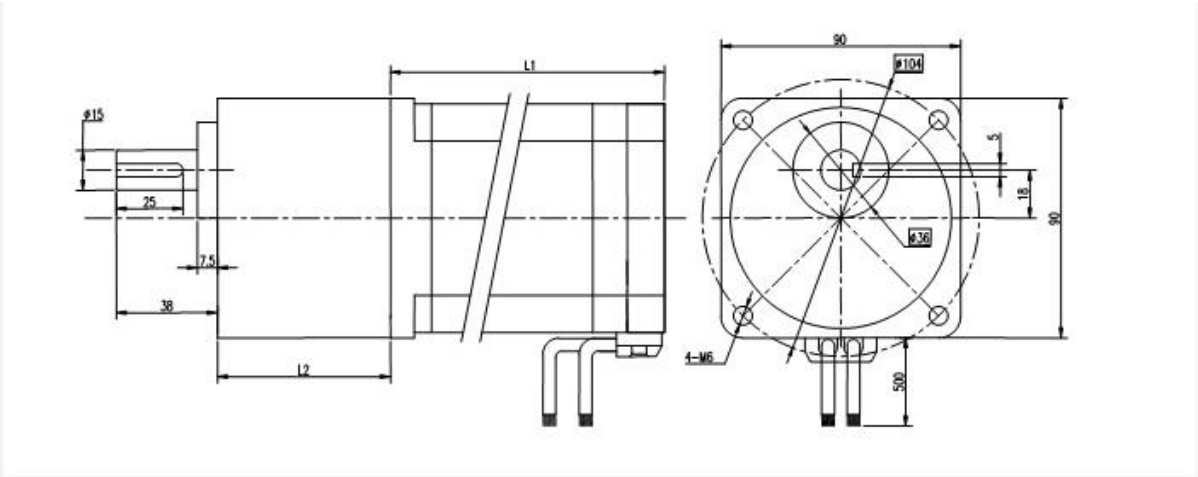

Motor Electrical Specification

Motor Model	DG865-220W	DG865-310W
Rated Voltage(VDC)	48	48
Rated Speed(Rpm)	3000	3000
Rated Torque(N.m)	0.7	1.0
Rated Power(W)	220	310
L1 Length(mm)	66.5	80.5

Gearbox Electrical Specification

Reducer Series	1	2
Transmission efficiency	95%	90%
Max radial load	1000N	1000N
Max axial load	200N	200N
Transmission torque	100N.m	160N.m
Reduction Ratio	5,10	15,20,25,30,40,50
L2 Length(mm)	74	93

* Note: We can manufacture products according to customer's requirements.
Optional accessory is the encoder and brake to match this product.

* Contact sales@ichmo.com.

©I.CH Motion® 2020 www.ichmo.com
Specifications subject to change without notice. Series: DG865 BLDC MOTOR