Application

Household Electrical Appliances, Laminator, Auto Control Machine Spotlight, etc.

Picture



Safety

Insulation resistance	DC 500V 100M ohms
Insulation strength	AC1500V, 50Hz/min(220V motor)
Insulation class	E(105℃) / B(130℃)
Environment	Temp.-10℃~+40℃ / Humidity: <85
Certification	CE RoHS

Specification

Model	Output speed (rpm)	Output Torque (kg.cm / lb.in) S1 continuous	S2 15 minutes	S2 5 minutes	Voltage (V.AC)	Current (A)	Frequency (Hz)	Input Power (W)	Noise (dB)	Rotation
S493-45-1.0	1.04	45 / 39	60 / 52.2	70 / 60.9	24 ******** 110 ******** 220	<0.2 ****** <0.05 ****** <0.023	50/60 Hz	2.5~7	<45	CW / CCW / Bi-directional
S493-30-1.5	1.50	30 / 26	40 / 34.8	46 / 40						
S493-22-2.0	2	22 / 19	30 / 26	35 / 30.5						
S493-18-2.5	2.5	18 / 15.7	24 / 20.9	28 / 24.4						
S493-18-2.5	4	11/9.6	15/13	17.5/15.2						
S493-09-4.8	4.8	9.4 / 8.2	12.5 / 10.9	14.5 / 12.6						
S493-09-5.0	5	9 / 7.8	12 / 10.4	14 / 12.2						
S493-08-5.8	5.8	7.6 / 6.6	10 / 8.7	12 / 10.4						
S493-05-9.0	9	5 / 4.35	6.5 / 5.7	7.8 / 6.8						
S493-03-15	15	3 / 2.6	4 / 3.5	4.6 / 4						
S493-02-25	25	1.8 / 1.57	2.4 / 2.1	2.8 / 2.43						
S493-02-30	30	1.5 / 1.3	2 / 1.74	2.3 / 2						
S493-01-45	45	1 / 0.87	1.3 / 1.13	1.5 / 1.3						
S493-01-60	60	0.75	1 / 0.87	1.2 / 1.04						
S493-01-75	75	0.6	0.8 / 0.7	1.0 / 0.87						

Note: Above datas are from motors under 50Hz. If under 60Hz, Speed*1.2 Torque/1.2 Other speed and torque needed, please contact our sale department

Mechanical Dimensions

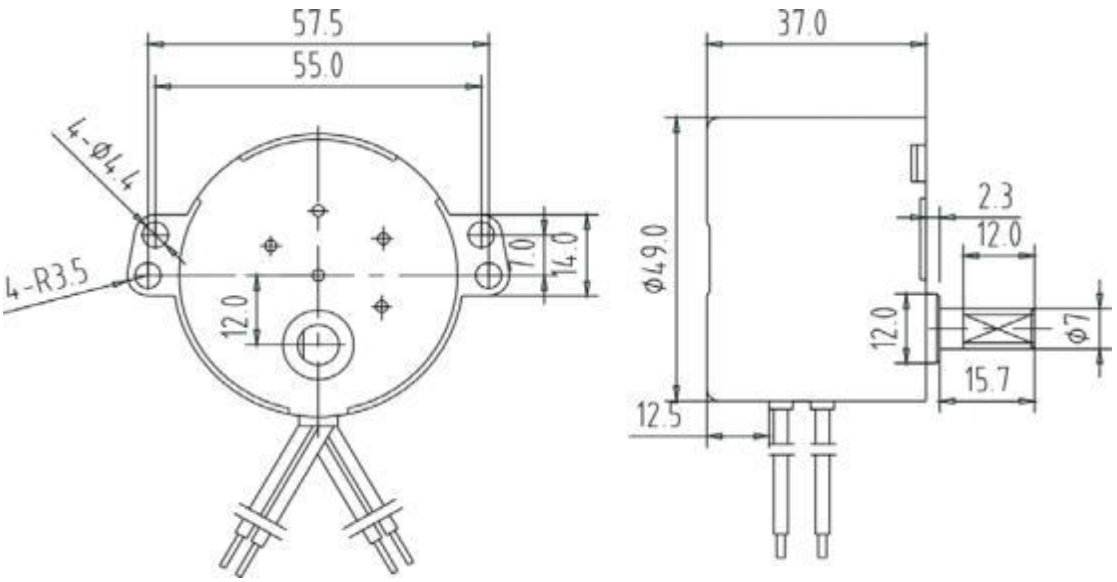

©I.CH Motion® 2020 www.ichmotion.com
Specifications subject to change without notice. Series: S493 (Size 49mm)

Application
Household Electrical Appliances, Laminator, Auto Control Machine Spotlight, etc.

Safety	
Insulation resistance	DC 500V 100M ohms
Insulation strength	AC1500V, 50Hz/min(220V motor)
Insulation class	E(105℃) / B(130℃)
Environment	Temp.-10℃~+40℃ / Humidity: <85
Certification	CE RoHS CCC

Picture



Specification

Model	Output speed (rpm)	Output Torque (kg.cm / lb.in) S1 continuous	S2 15 minutes	S2 5 minutes	Voltage (V.AC)	Current (A)	Frequency (Hz)	Input Power (W)	Noise (dB)	Rotation
S593-50-05B	5	50/43.5	80 / 69.6	100 / 87	24 ********** 110 ********** 220	<0.3 ********** <0.065 ********** <0.032	50/60Hz	<16	<40	CW / CCW / Bi-directional
S593-25-10	10	25 / 21.8	45 / 39.2	52 / 45.2						
S593-20-12	12	20 / 17.4	37 / 32.2	43 / 37.4						
S593-16-15	15	16 / 13.9	29 / 43.5	35 / 30.5						
S593-12-20	20	12/ 10.4	22 / 19.1	26 / 22.6						
S593-08-30	30	8 / 7	15/ 13	17.5 / 15.2						
S593-04-60	60	4/3.5	7/6	8.8/7.7						
S593-03-98	98	2.5 / 2.18	4.5/ 3.9	5.3 / 4.6						

Note: Above datas are from motors under 50Hz. If under 60Hz, Speed*1.2 , Torque/1.2
Other speed and torque needed, please contact our sale department

Mechanical Dimensions

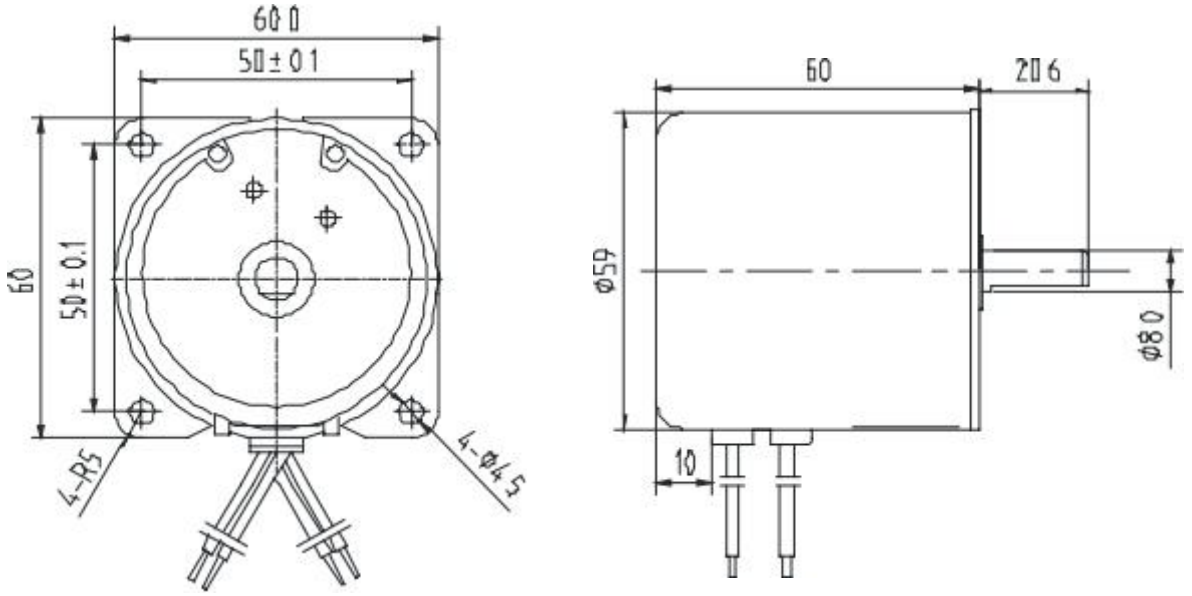

©I.CH Motion® 2025 www.ichmotion.com
Specifications subject to change without notice. Series: S593C(size59mm)

Application
Household Electrical Appliances, Laminator, Auto Control Machine Spotlight, etc.

Safety	
Insulation resistance	DC 500V 100M ohms
Insulation strength	AC1500V, 50Hz/min(220V motor)
Insulation class	E(105℃) / B(130℃)
Environment	Temp.-10℃~+40℃ / Humidity: <85
Certification	CE RoHS

Picture



Specification

Model	Output speed (rpm)	Output Torque (kg.cm / lb.in) S1 continuous	S2 15 minutes	S2 5 minutes	Voltage (V.AC)	Current (A)	Frequency (Hz)	Input Power (W)	Noise (dB)	Rotation
S643-30-15	15	30 / 26.1	40 / 34.8	60 / 52.2	24 ********** 110 ********** 220	<0.9 ********** <0.2 ********** <0.1	50/60Hz	<20	<45	CW / CCW / Bi-directional
S643-22-20	20	22 / 19.1	30 / 26.1	45 / 39.2						
S643-18-25	25	18 / 15.7	24 / 20.9	36 / 31.						
S643-15-30	30	15 / 13	20 / 17.4	30 / 26.1						
S643-12-40	40	11.5 / 10	15 / 13	22.5 / 19.8						
S643-09-50	50	9 / 7.8	12 / 10.4	18 / 15.7						
S643-08-60	60	7.5 / 6.5	10 / 8.7	15 / 13						
S643-07-70	70	6.4 / 5.6	8.6 / 7.5	12.8 / 11.1						
S643-06-80	80	5.6 / 4.9	7.5 / 6.5	11 / 9.6						
S643-05-99	99	4.5 / 3.9	6 / 5.2	9 / 7.8						
S643-03-152	152	3 / 2.6	4 / 3.5	6 / 5.2						

Note: Above datas are from motors under 50Hz. If under 60Hz, Speed*1.2, Torque/1.2
Other speed and torque needed, please contact our sale department

Mechanical Dimensions

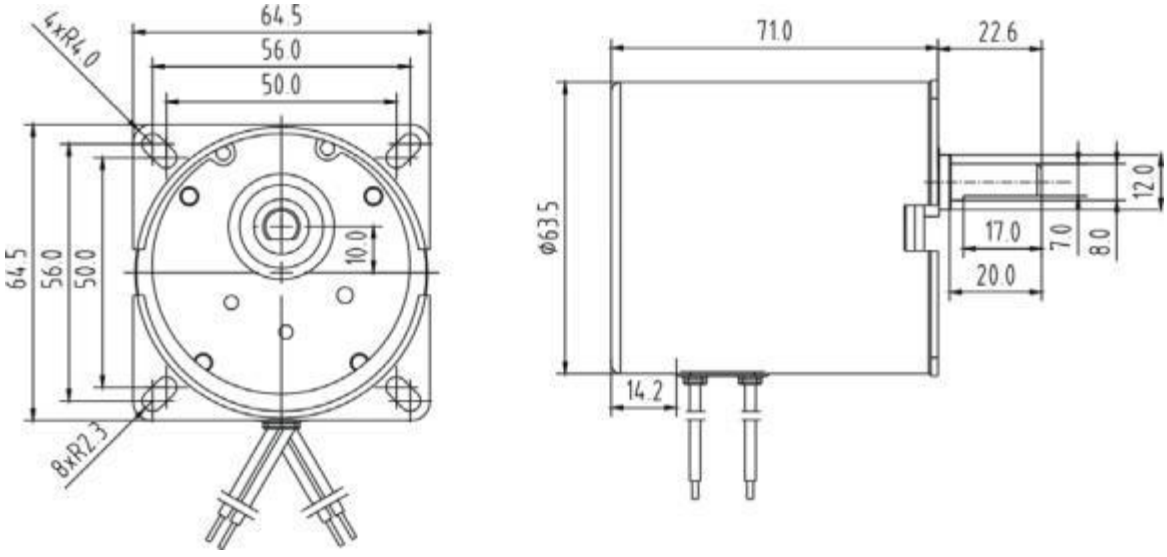

©I.CH Motion® 2025 www.ichmotion.com
Specifications subject to change without notice. Series: S643(Size 64mm)